CONGRATULATIONS ON YOUR NEW SCAN WOOD-BURNING STOVE

You have purchased a product by one of Europe's leading manufacturers of wood-burning stoves, and we are sure that you will have years of pleasure from your purchase. To make the best possible use of your stove, it is important that you follow our advice and instructions.

Read through this Assembly and Instruction Manual carefully before you start to assemble your stove.

ASSEMBLY AND INSTRUCTION MANUAL SCAN 80

Scan 80-1
Closed base

Scan 80-2
Base with door

Scan 80-3
High Top
Closed base

Scan 80-4
High Top
Base with door

Scan 80-3C (Corner)
High Top
Closed base

Scan 80-4C (Corner)
High Top
Base with door

CONTENTS

TECHNICAL DATA 4

Installation 4
Safety 4
The Clean Air Act 1993 and Smoke Control Areas 4
Te chnical data and dimensions 5
Dimensional drawing for Scan 80-1 and 80-2 6
Dimensional drawing for Scan 80-3 and 80-4 7
Type plate 8
Product registration umber 8

ASSEMBLY 9

Tools for the mounting of the woodburning stove 9
Additional accessories 9
Loose parts 9
Disposal of packaging 9
Removal of the stove from the pallet 10
Fitting the flue connection piece in the top outlet 10
Fitting the flue connection piece in the rear outlet 11
Door (Self-closing) 12
Height adjustment of the stove 13
Fresh air intake 14
Closed combustion system 14
Load-bearing subsurface 14
Floor plate 15
Heat-storage system 15
Existing chimney and pre-fabricated element chimney 16
Connection between stove and steel chimney 16
Requirements for chimney 16
Connection with 90° elbow pipe 16
Positioning the stove at a non-flammable wall 16
Distance to furniture 16
Safety distance 16
Distance to flammable materials 17

INSTRUCTIONS FOR USE 19

CB-technology (Clean Burn) 19
Baffle plate 19
Ash container 19
Primary air 19
Secondary air 19
Adjustment of primary- and secondary air 20

INSTRUCTIONS FOR HEATING 21

Environmentally friendly operation 21
Lighting 21
"Top down" lighting 21
Continuous operation 22
Warning about over-firing 22
Firing in the spring or autumn 22
the function of the chimney 22
Using the stove in various weather conditions 22
General notes 23
Chimney fire 23

HANDLING OF THE FUEL 24

Selecting wood/fuel 24
Preparation 24
Storing 24
Moisture 24
Use of the following as fuel is illegal 24
Calorific value of the wood 24

MAINTENANCE 25

Sweeping the chimney and cleaning the stove 25
Checking the stove 25
Servicing 25
Combustion chamber lining 25
Gaskets 25
Painted surfaces 25
Cleaning the glass 26
Removing the baffle plate and the baffle unit 26
Disposal of stove parts 26

TROUBLESHOOTING 27

WARRANTY 28

NOTES 29

TECHNICAL DATA

INSTALLATION

- The house owner is responsible for ensuring that installation and assembly are in accordance with national and local building regulations as well as the information provided in this Assembly and Instruction Manual.
- When you install any kind of fireplace or stove, you must inform the local building and housing authorities. In addition you are obliged to have the installation inspected and approved by a local chimney sweep prior to commissioning.
- To ensure best-possible functionality and safety for your installation, we advise you to call a professional fitter. Your Scan Dealer will be able to recommend a qualified fitter in your area. For information on Scan Dealers, please go to www.scan.dk.

SAFETY

Any changes made to the product by the dealer, fitter or user could result in the product and safety functions not functioning as intended. The same applies to the fitting of accessories or extra equipment not supplied by Scan A/S. This could also be the case if parts that are necessary for the operation and safety of the stove are dismantled or removed.

THE CLEAN AIR ACT 1993 AND SMOKE CONTROL AREAS

Under the Clean Air Act local authorities may declare the whole or part of the district of the authority to be a smoke control area. It is an offence to emit smoke from a chimney of a building, from a furnace or from any fixed boiler if located in a designated smoke control area. It is also an offence to acquire an "unauthorized fuel" for use within a smoke control area unless it is used in an "exempt" appliance ("exempted" from the controls which generally apply in the smoke control area).

The Secretary of State for Environment, Food and Rural Affairs has powers under the Act to authorize smokeless fuels or exempt appliances for use in smoke control areas in England. In Scotland and Wales this power rests with Ministers in the devolved administrations for those countries. Separate legislation, the Clean Air (Northern Ireland) Order 1981, applies in Northern Ireland. Therefore it is a requirement that fuels burnt or obtained for use in smoke control areas have been "authorized" in Regulations and that appliances used to burn solid fuel in those areas (other than "authorized" fuels) have been exempted by an Order made and signed by the Secretary of State or Minister in the devolved administrations.

- Further information on the requirements of the Clean Air Act can be found here: www.smokecontrol.defra.gov.uk
- Your local authority is responsible for implementing the Clean Air Act 1993 including designation and supervision of smoke control areas and you can contact them for details of Clean Air Act requirements"
- The secondary air valve has been modified, so that is does not close completely but has an opening corresponding to the position used at the lowest emission test.
- You can use any type of wood as fuel.
- This stove has been recommended as suitable for use in smoke control areas when burning wood.

Materials	Steel plate, Cast iron Galvanised sheet Vermiculite
Surface treatment	Senotherm
Max. log length	25 cm*
Weight Scan 80-1/2	ca. 104,4 kg
Weight Scan 80-3/4	ca. 110,0 kg
Flue conn. piece internal diameter	144 mm
Flue conn. piece external diameter	148 mm
Approval type	Intermittent**

* The stove can take logs up to 30 cm (horizontally placed).

** Intermittent operation in this context means normal use of a wood-burning stove. In other words, you should let the fire die down until only the embers are left before refuelling.

The Scan 80-series is produced in accordance with type approval for the product, which also covers the product's Assembly and Instruction Manual.

The Declaration of Performance (DoP) is available from www.scan.dk

Tested in accordance with EN 13240		
CO Emission at 13% O_2	0,06	%
CO Emission at 13% O_2	800	mg/Nm^3
Dust @ 13% O_2	<6	mg/Nm^3
No_x @ 13% O_2	81	mg/Nm^3
Efficiency	84	%
Energy efficiency index	112,8	
Energy efficiency class	A+	
Nominal output	6	kW
Chimney temperature EN 13240	195	°C
Temperature in flue conn. piece	233	°C
Amount of smoke	6,3	g/sec
Negative pressure EN 13240	12	Pa
Recommended negative pressure in flue connecting piece	17-20	Pa
Required combustion air supply	19-25	m^3/h
Fuel	Wood	
Fuel consumption	1,9	kg/h
Amount of fuel required to light	1,5	kg
Amount of fuel, max.	2,25	kg

(Reference to EN 13240: 2001/A2:2004)

PLEASE NOTE!

You get the best use of the stove by using a top-down lighting method.
See "Instructions for heating".

A Centre rear outlet

B Height to the beginning of flue connecting piece at top outlet

C Centre of fresh air intake

All measures are in mm

The height is without adjustment screws.

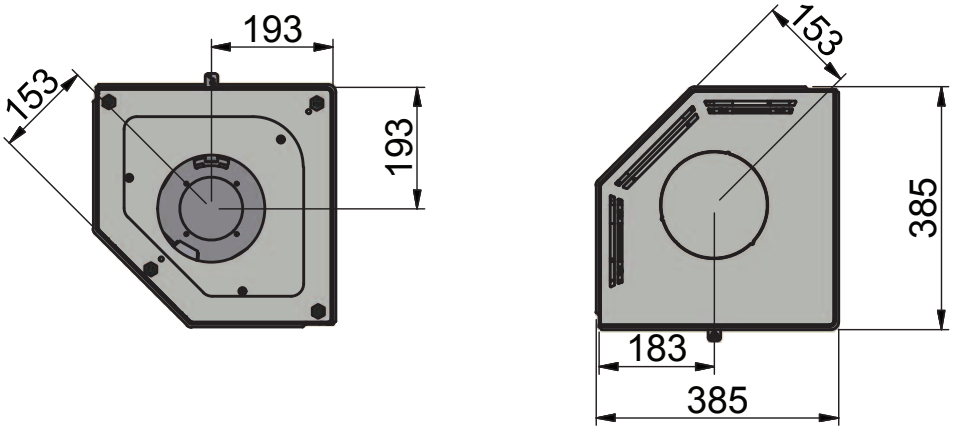

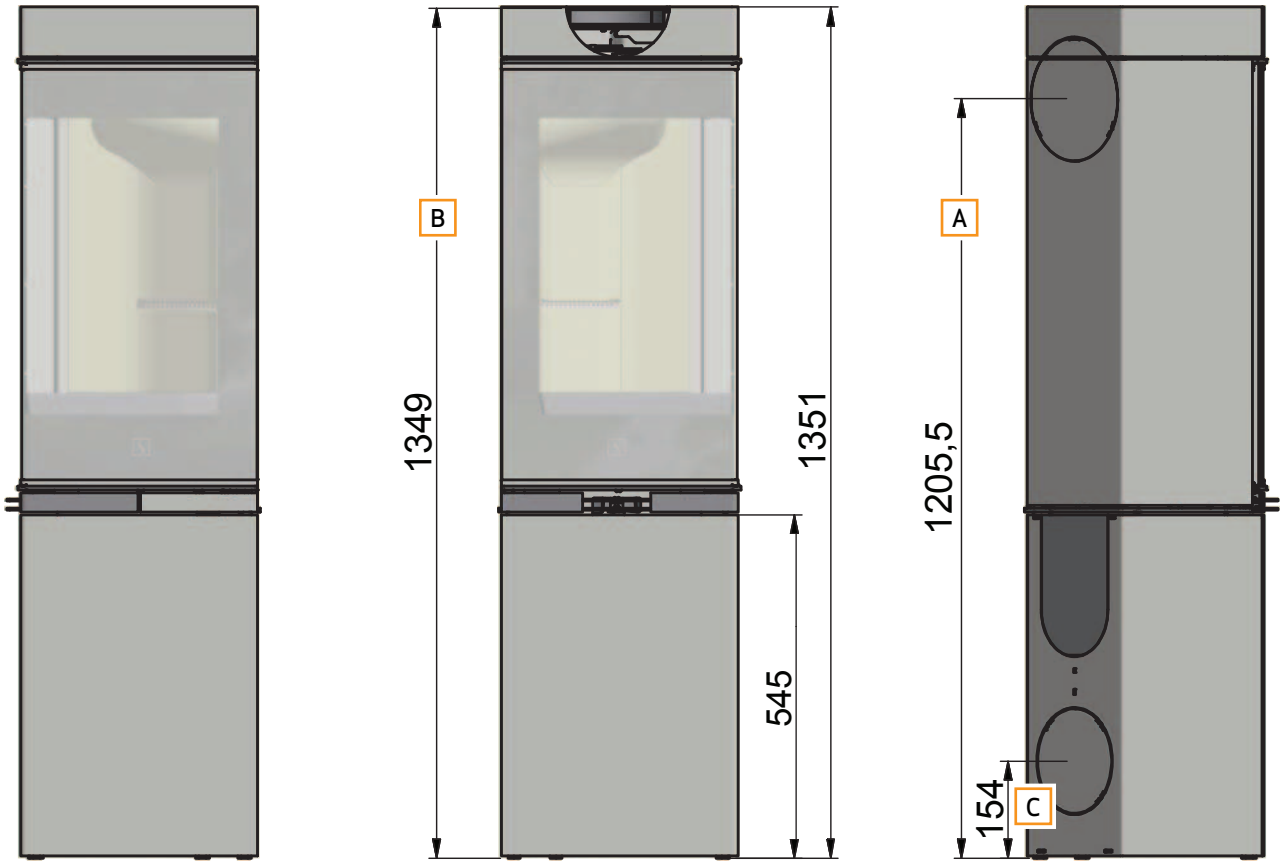

A Centre rear outlet

B Height to the beginning of flue connecting piece at top outlet

C Centre of fresh air intake

All measures are in mm

The height is without adjustment screws.

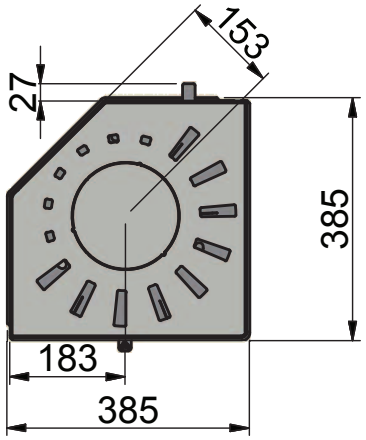

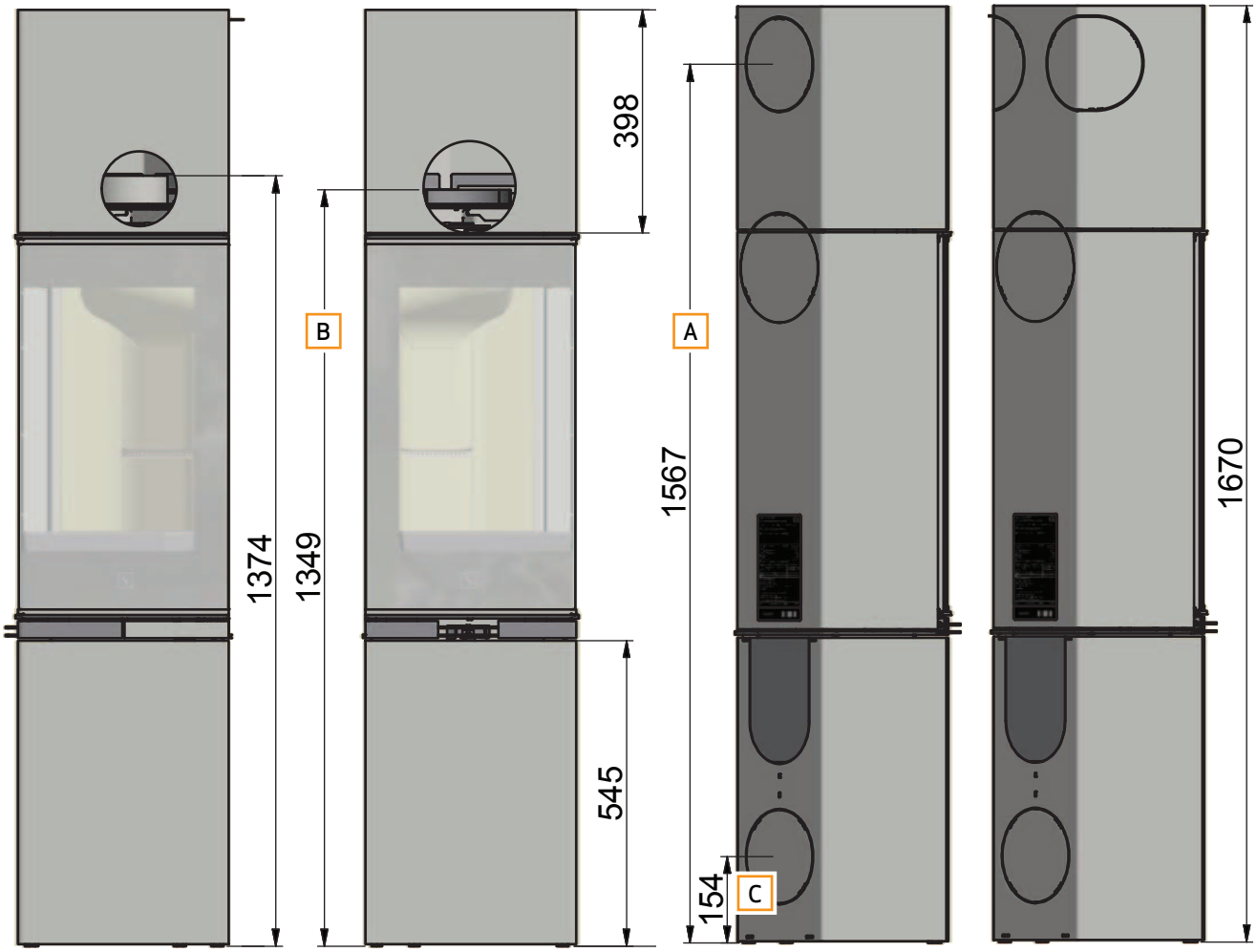

TYPE PLATE

All Scan wood-burning stoves are fitted with a type plate that specifies the approval standards and the distance to flammable materials.

The type plate is located at the rear of the stove.

Type plate

Scan 80-Series
Freestanding room heater fired by solid fuel

Standard: **EN 13240** **DoP 90580600**

Minimum distance to combustible materials

Side: 450 mm - Back: 200 mm - Front: 800 mm
Follow assembly- and instructions manual.

The appliance can be operated in a shared flue.

CO emission at 13% O2:	0,06%	800 mg/Nm³
Dust at 13% O2:		6 mg/Nm³
Flue gas temperature:		195°C
Nominal heat output:		6 kW
Efficiency:		84%
Fuel type:		Wood
Operation type:		Intermittent
Reaction to fire:		A1

Country	Classification	Certificate/Standard	Approved by
EUR	Intermittent	EN13240:2001	Teknologisk Institut
Norway		NS 3058	Teknologisk Institut
Austria	15a B-VG	ELAB-2100-AUS	Teknologisk Institut
Schweiz	LRV 11	VKF	
Germany	Stufe 2	1. BImSchV	

Follow assembly- and instructions manual.
Use only recommended fuels.
Montage- und Bedienungsanleitung beachten.
Verwenden Sie nur empfohlene Brennstoffe.

1000 Scan A/S DK 5492 Vissenbjerg 07-2017

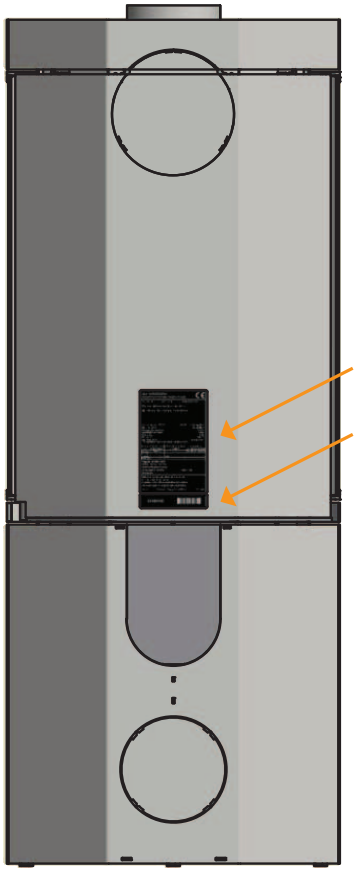

PRODUCT REGISTRATION UMBER

All Scan wood-burning stoves are provided with a product registration number.

Please make a note of this number at the rear page of this manual; you will always need to quote it when contacting your dealer or Scan A/S.

The product registration number is located at the rear of the stove.

Product registration number

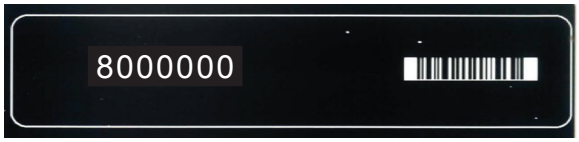

ASSEMBLY

TOOLS FOR THE MOUNTING OF THE WOODBURNING STOVE

- Spirit level
- Cutting nippers
- Flat head screwdriver
- 4 mm Allen key
- Crosstip screwdriver

ADDITIONAL ACCESSORIES

- Small shaped floor plate in clear or smoke-coloured glass
- Heat-storage stones for High Top
- Large shaped floor plate in clear or smoke-coloured glass

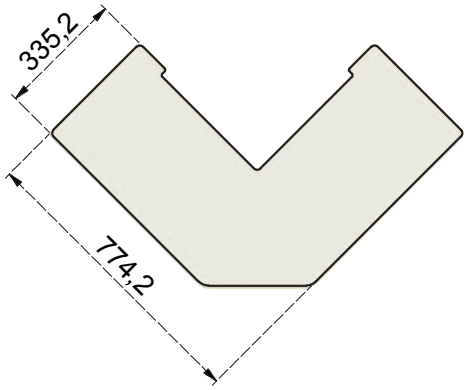

Small shaped floor plate in clear or smoke-coloured glass for the Scan 80-series

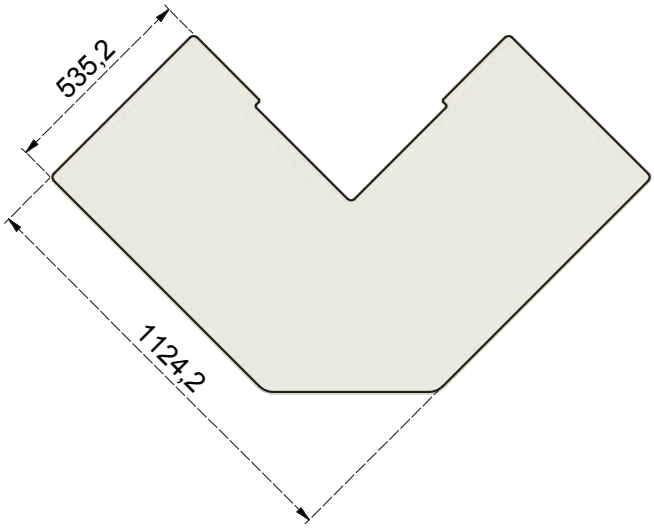

Large shaped floor plate in clear or smoke-coloured glass for the Scan 80-series

LOOSE PARTS

The following loose parts are located in the stove's combustion chamber:

- Oven mitt
- Gasket for flue connecting piece
- Aash container
- Two flue connection pieces (int. and ext. flue pipe)
- Screws for fastening the flue connection piece

DISPOSAL OF PACKAGING

Your Scan stove may come supplied with the following packaging:

Wood packaging	The wood packaging can be reused and after final use can be incinerated as a CO_2 neutral product or sent for recycling.
Flamingotop	Send for recycling or waste disposal.
Foam	Send for recycling or waste disposal.
Plastic bags	Send for recycling or waste disposal.
Stretch/plastic film	Send for recycling or waste disposal.

REMOVAL OF THE STOVE FROM THE PALLET

Before installing the stove, check that it has no damages.

The stove is secured on the pallet with two screws on the inside. For Scan 80-2 and 80-4 open the door and dismount the screws. For Scan 80-1 and 80-3 you can get access to the screws from the rear of the stove **(1)**.

NOTE: Do not touch the glass

NOTE: The stove must be taken off the pallet by dismounting the screws. Do not knock off the pallet, as this can damage the stove.

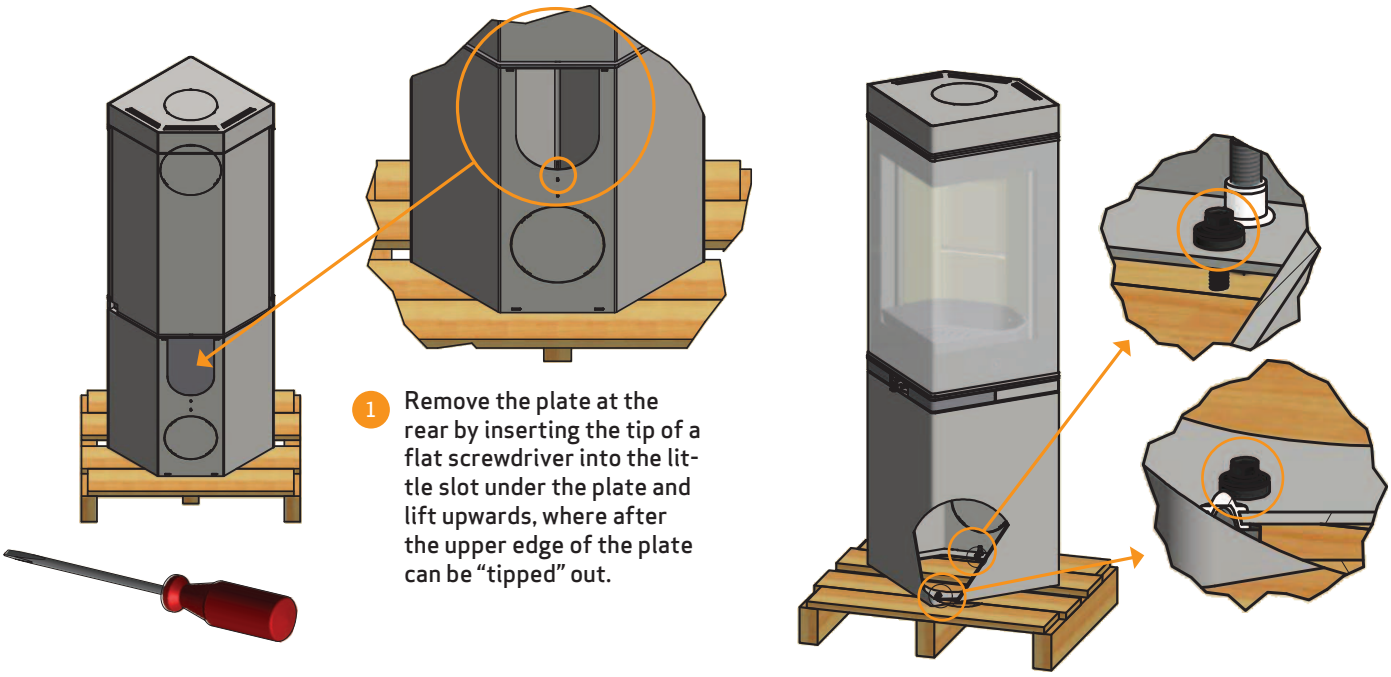

FITTING THE FLUE CONNECTION PIECE IN THE TOP OUTLET

The manufacturer has prepared the stove to take a top outlet.

The gasket for the flue connection piece, flue connection piece and screws can be found in the stove's combustion chamber.

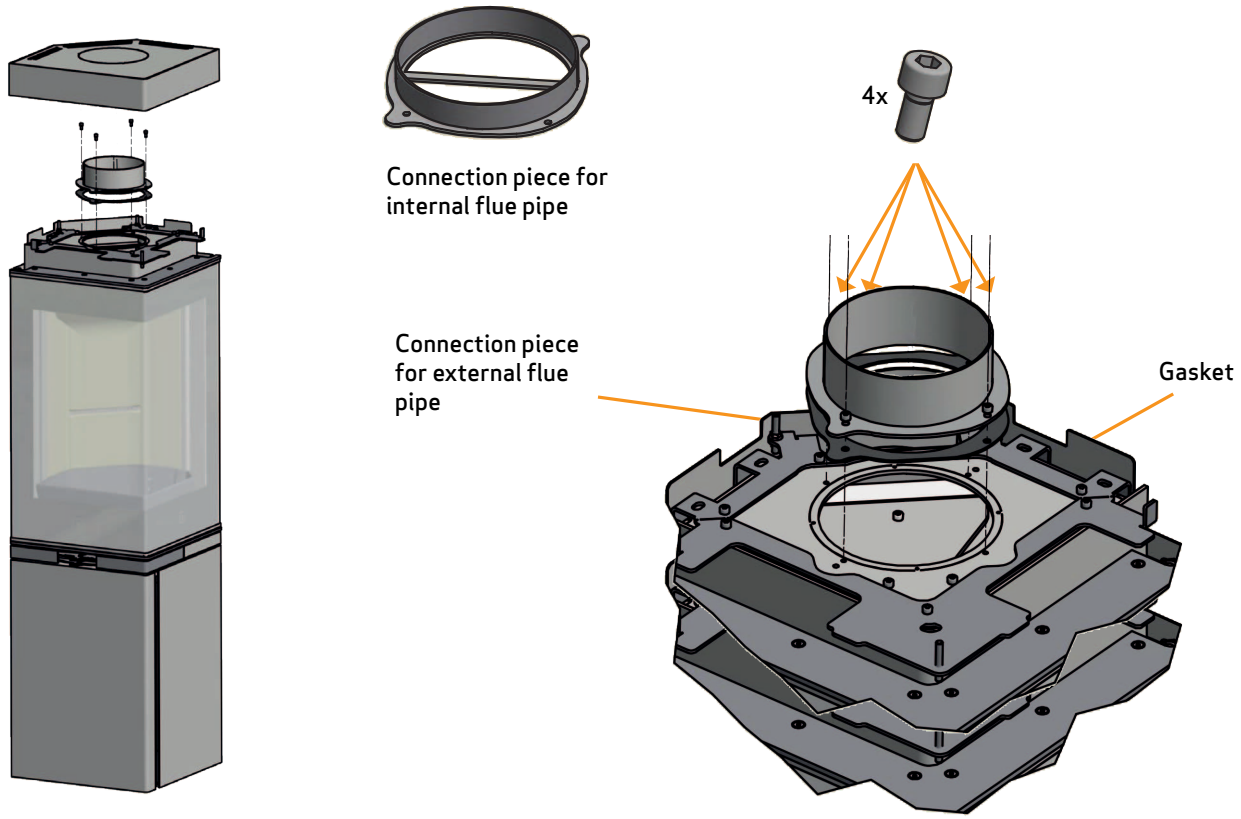

FITTING THE FLUE CONNECTION PIECE IN THE REAR OUTLET

The manufacturer has prepared the stove to take a top outlet.

The gasket for the flue connection piece, flue connection piece and screws can be found in the stove's combustion chamber.

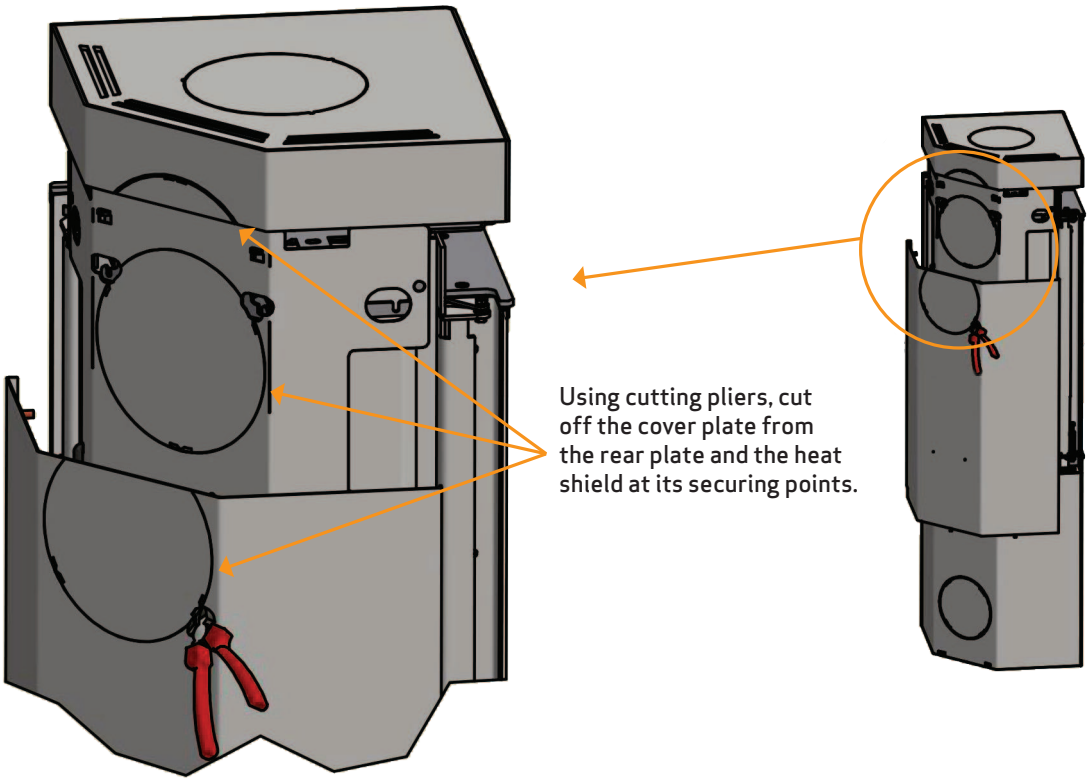

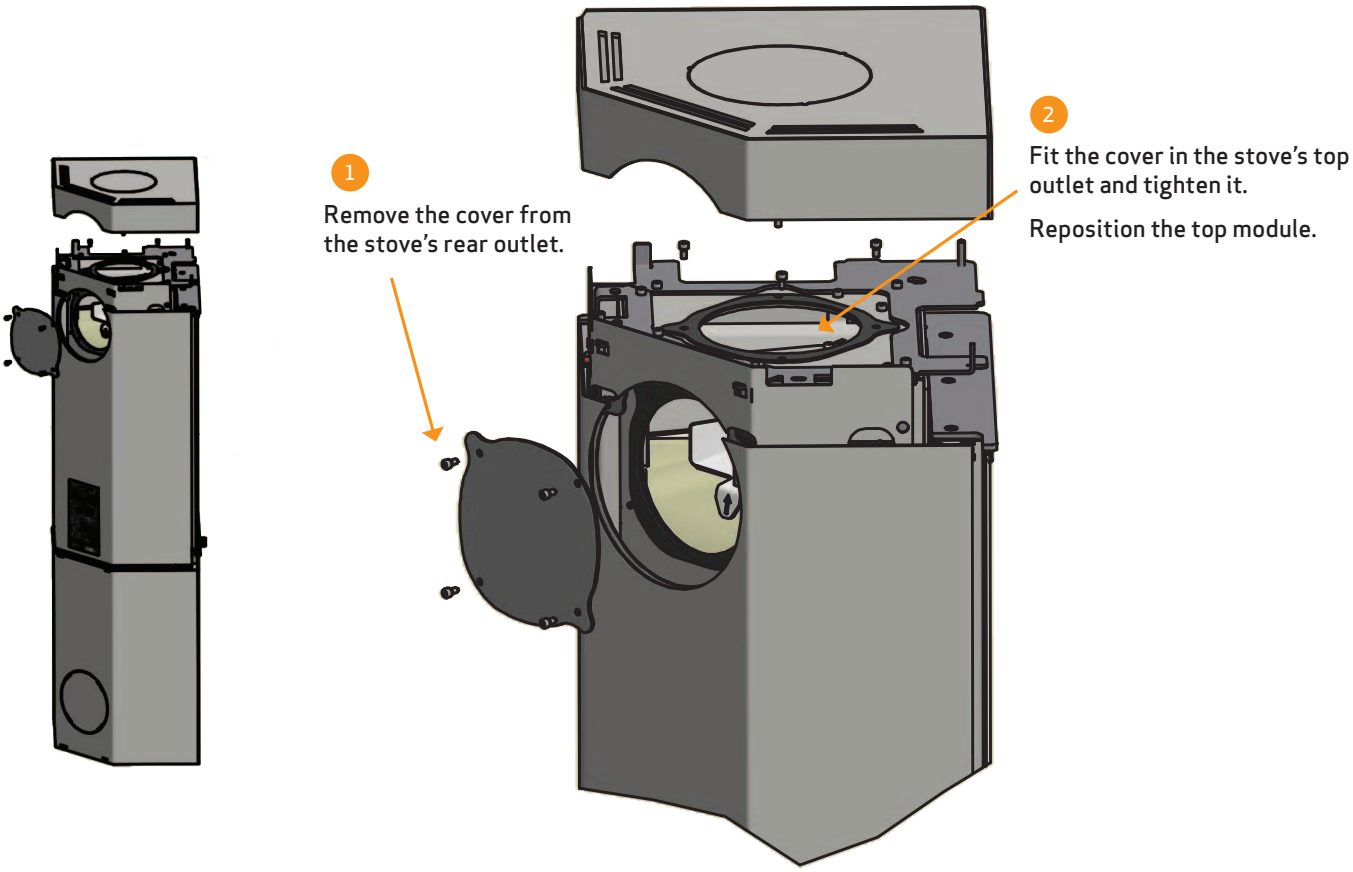

FITTING THE FLUE CONNECTION PIECE IN THE REAR OUTLET

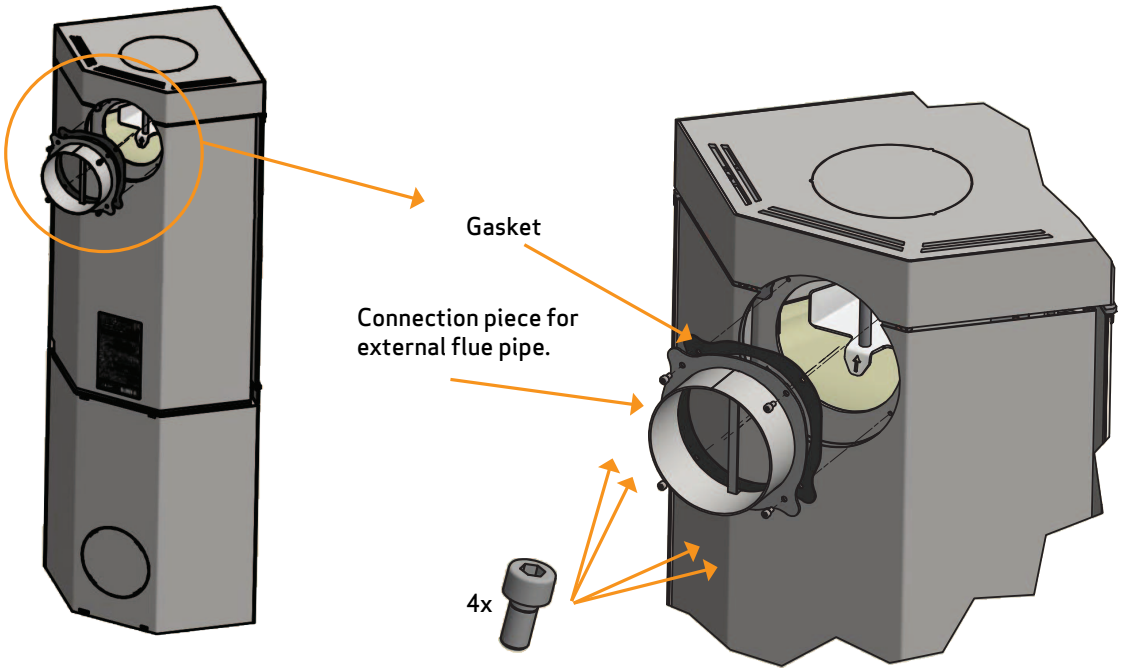

Tighten the flue connection piece with the screws provided.

DOOR (SELF-CLOSING)

The door is delivered without self-closing function.

NB: If you want a self-closing door, the spring can be tightened by turning the long screw (inside the spring) clockwise using a Allen key (5 mm) and at the same time tightening the pointed screw at the bottom with a Allen key (2.5 mm).

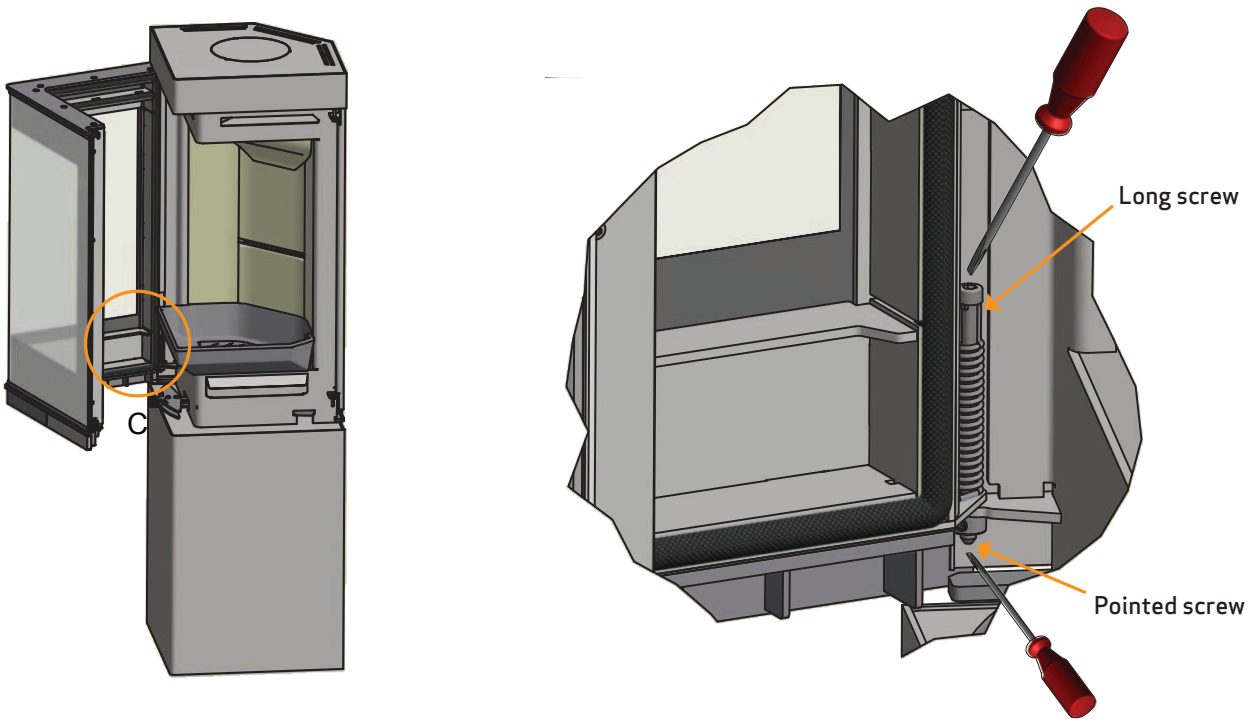

HEIGHT ADJUSTMENT OF THE STOVE

The Scan 80-series has four adjustment screws under the stove. Use the adjustment screws to get the stove to stand straight and level.

For Scan **80-2** and **80-4, open the door and adjust the screws.**
For Scan **80-1 and 80-3 you can access the screws from the rear (1)**.

Adjustment screws

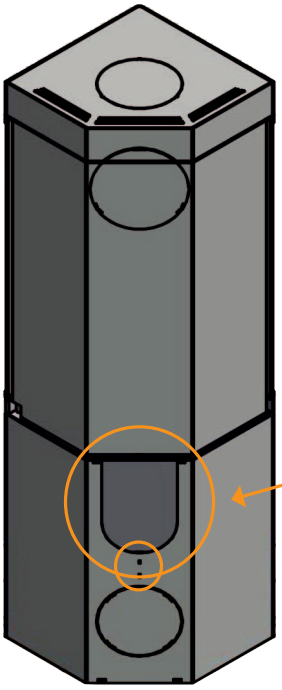

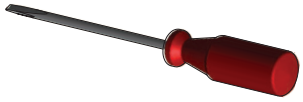

1

Remove the plate at the rear by inserting the tip of a flat screwdriver into the little slot under the plate and lift upwards, where after the upper edge of the plate can be "tipped" out.

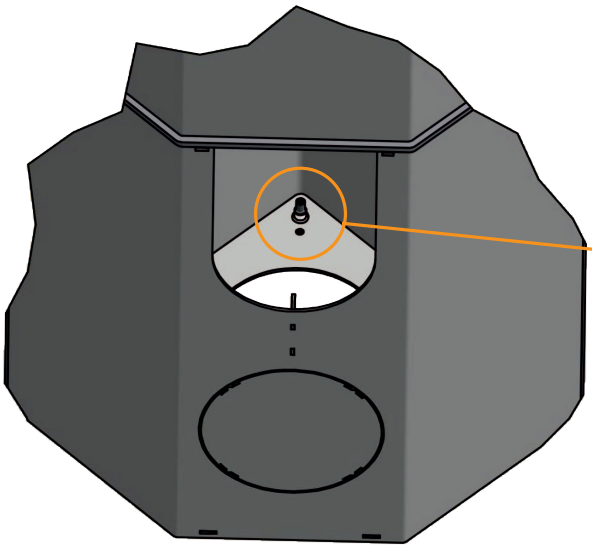

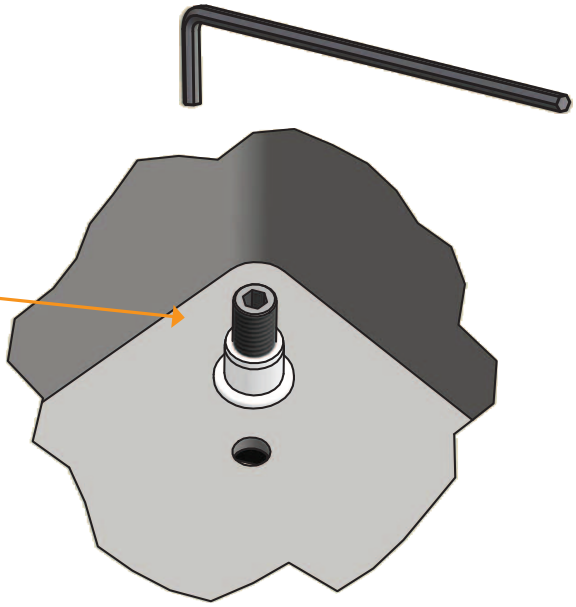

Adjust the screws so that the stove stands straight and level.

FRESH AIR INTAKE

In a well-insulated house the air used for the combustion process has to be replaced. This particularly applies to houses with mechanical ventilation. There are different ways of making sure that air is exchanged. The most important thing is to ensure that there is a supply of air to the room where the wood stove is located. The external wall vent must be located as close to the wood stove as possible, and you must be able to close it when you are not using the stove.

National and local building regulations must be followed with regard to connection of a fresh air intake.

CLOSED COMBUSTION SYSTEM

You should use the closed combustion system for the wood-burning stove if you live in a newly-built, airtight home. External combustion air is connected through a ventilation pipe via the wall or floor.

It must be possible to shut off the ventilation pipe with a valve, when the stove is not in use.

Minimum Ø 100 mm ventilation pipe, maximum length: 6 metres with a maximum of one bend.

If you want external combustion air at the rear, you must close the hole in the bottom with the dismounted cover plate.

NOTE: if the stove has a fresh air connexion or closed combustion, the ventilation pipe must be open, when the stove is in use!

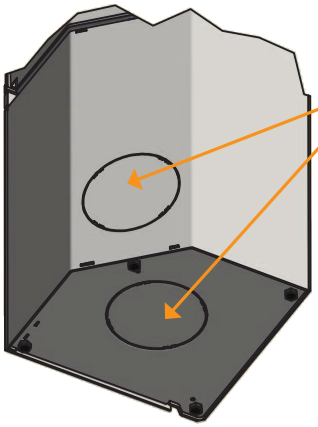

If you want external combustion air via floor or wall, remove the cover plate with a pair of cutting pliers

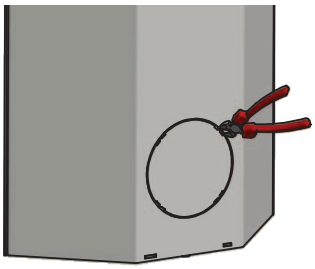

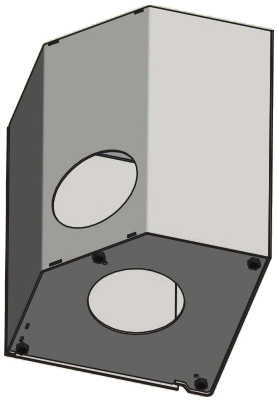

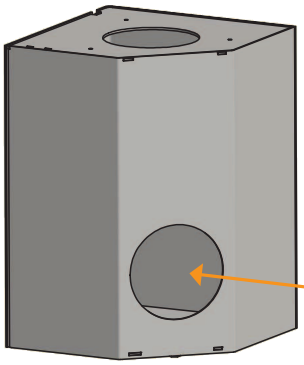

External combustion air is connected at the connection piece under the combustion chamber.

LOAD-BEARING SUBSURFACE

All items in our product range come under the category of lightweight fireplaces and stoves and do not normally require any reinforcement of the beam structure. They can be positioned on ordinary beams/floor.

You should of course make sure that the subsurface on which the stove is positioned can indeed support the weight of the stove and, where applicable, a steel chimney, if you have opted for this solution.

FLOOR PLATE

If you are placing the stove on a flammable floor, you must comply with the national and local regulations on the size of any non-flammable subsurface required to cover the floor around the stove.

Your local Scan dealer can advise you on regulations concerning protection of flammable materials in the vicinity of your stove.

The floor plate's function is to protect the floor and flammable material against any sparks that may occur.

NOTE: The stove must be levelled, and fresh air inlet must be mounted, before the stove is moved into place.

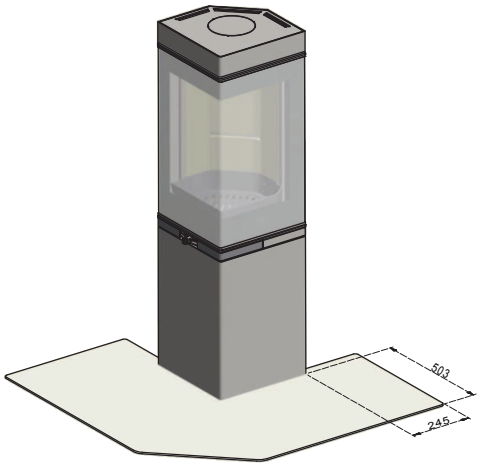

Large shaped floor plate in clear or smoke-coloured glass for the Scan 80-series

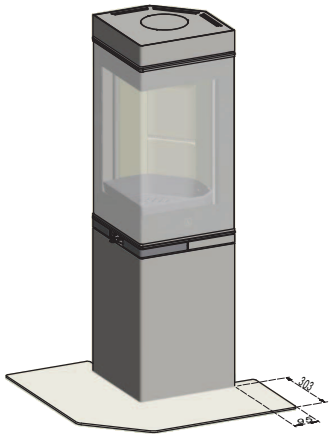

Small floor plate in clear or smoke-coloured glass for the Scan 80-series

HEAT-STORAGE SYSTEM

Heat-storage stones are made from a special material with a high heat capacity. The stones are heated when the stove is on, re-releasing heat once it is off. This extends the time over which the stove remains warm.

- Firing with the air grid open will give a quicker heating. Firing with theair grid closed will extend the heating time of the stove.

The heat-storage stones are placed in the High Top around the flue pipe as illustrated.

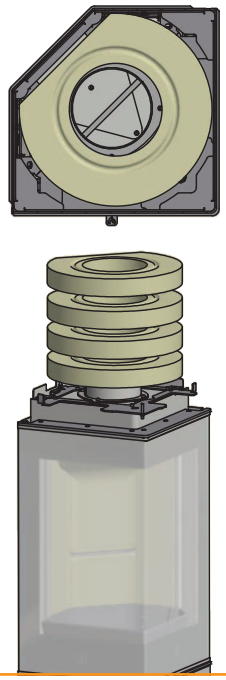

Place the High Top over the heat-storage stones.

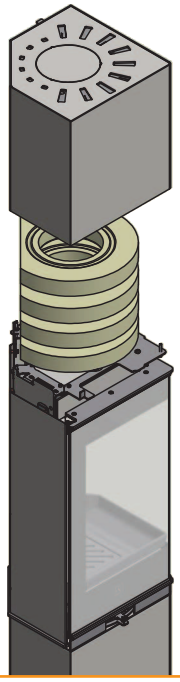

Air grid for heat-storage stones in closed position.

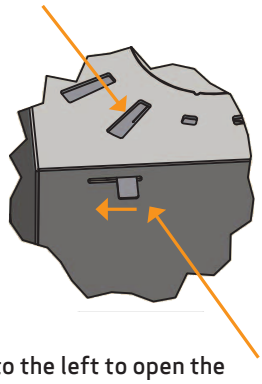

Pull to the left to open the convection holes in the top and let out the stored heat.

EXISTING CHIMNEY AND PRE-FABRICATED ELEMENT CHIMNEY

If you intend to connect your stove to an existing chimney, it makes sense to contact an authorised Scan dealer, or a local chimney sweep, for advice. These experts will also let you know if your chimney needs renovating.

- When connecting a pre-fabricated element chimney, follow the manufacturer's connection instructions for the relevant chimney type.

CONNECTION BETWEEN STOVE AND STEEL CHIMNEY

Your Scan dealer, or local chimney sweep, can advise you on choosing a make and type of steel chimney. This ensures that the chimney will match your wood-burning stove. As a general rule, the length of the chimney should not be less than 4 metres, measured from the top of the stove. Specific weather or installation conditions might require a different length.

- Choosing the wrong length or diameter of steel chimney could impair functionality.
- Always comply exactly with the instructions provided by the steel chimney supplier.

REQUIREMENTS FOR CHIMNEY

The chimney must have a minimum internal diameter of 148 mm and have a T400 designation, with G for the soot fire test.

The requirements to the chimney and the flue pipe in terms of safety distances must be met.

CONNECTION WITH 90° ELBOW PIPE

If you opt to connect the stove with an elbow pipe, you should use a curved elbow, as this gives a better draught.

If you connect the stove with a sharp elbow pipe, the cleansing lid must be placed in the vertical part so that the horizontal part can be cleaned through here.

POSITIONING THE STOVE AT A NON-FLAMMABLE WALL

There are no demands concerning the distance to non-flammable materials, but we recommend a distance of 50 mm in order to facilitate the cleaning of the stove, the flue pipes and the chimney and to prevent possible damages to the wall.

DISTANCE TO FURNITURE

Distance to furniture: min. 800 mm.

You should however assess whether furniture or other items might become excessively dry due to being too close to the stove.

Distance to ceiling (High Top): 350 mm.

SAFETY DISTANCE

European, national and local regulations concerning safety distances for wood-burning stoves must be complied with.

DISTANCE TO FLAMMABLE MATERIALS, WITH UNINSULATED FLUE PIPE

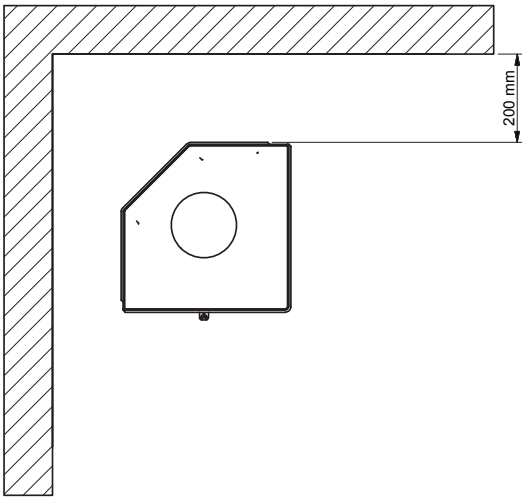

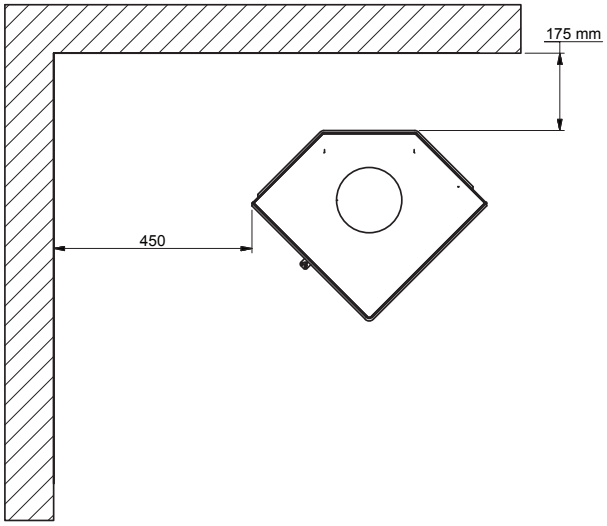

DISTANCE TO FLAMMABLE MATERIALS, WITH INSULATED FLUE PIPE

These distances apply for an insulated flue pipe all the way down to the stove, having a minimum of 30 mm insulation.

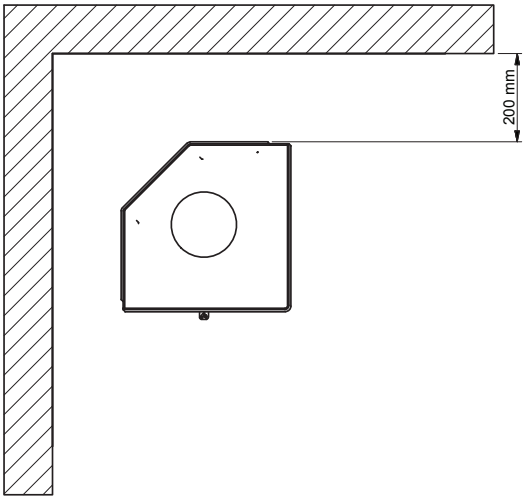

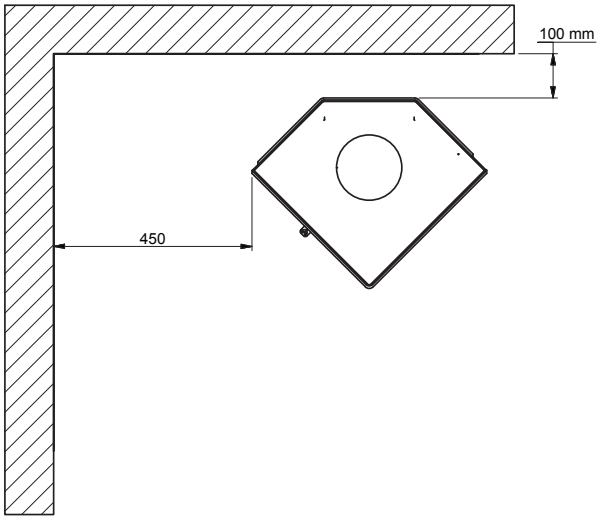

Flammable material

All distances are minimum distances.

Distance to furniture: 800 mm.

DISTANCE TO FLAMMABLE WALL PROTECTED BY A FIRE WALL

110 mm brick, 50 mm JØTUL Firewall or other material with a corresponding insulation ability.

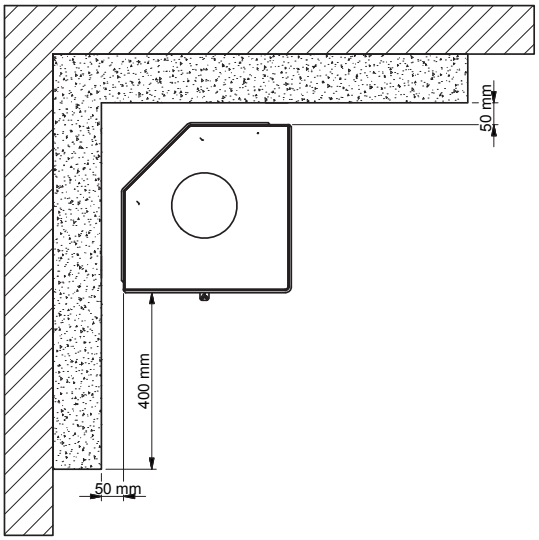

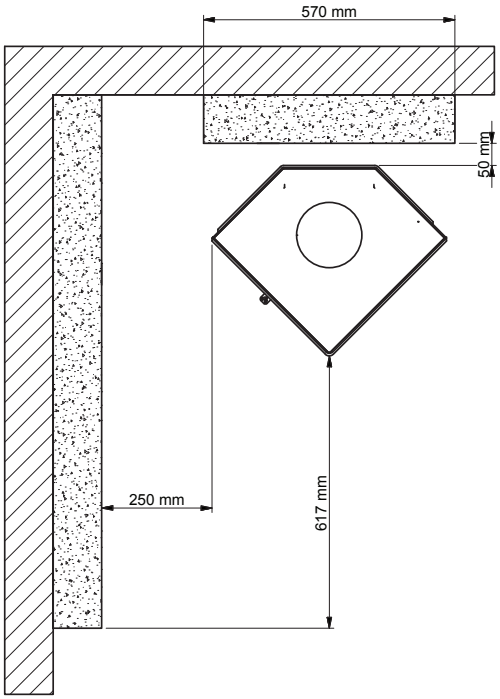

Flammable material

Fire wall

All distances are minimum distances.

Distance to furniture: 800 mm.

INSTRUCTIONS FOR USE

CB-TECHNOLOGY (CLEAN BURN)

The stove is equipped with CB technology. In order to ensure optimal combustion of gases released during the combustion process, air passes through a specially developed system of channels. The heated air is conducted into the combustion chamber through the holes in the rear lining of the combustion chamber and at the baffle plates. This airflow is controlled by the rate of combustion and cannot therefore be regulated.

NOTE: Wood must not be added above the CB-rail.

BAFFLE PLATE

The baffle plate is located in the upper part of the combustion chamber. The plate holds back smoke, making sure it stays inside the combustion chamber for a longer time before escaping through the chimney. This reduces the flue gas temperature as the gases have more time to dissipate heat to the stove.

The baffle plate must be removed for sweeping; see "Maintaining your wood-burning stove". Note that the baffle plate is made of porous, ceramic material, and is liable to break easily. You should therefore handle it with care.

The baffle plate is subject to wear and tear and not covered by the warranty.

ASH CONTAINER

- Open the door of the stove to access the ash container under the combustion chamber.
- The ash container must always be closed during operation.
- The ash container must not be become too full and must therefore be emptied at regular intervals.
- Never empty ashes into a flammable container. Ashes can contain glowing embers long after you finish operating the stove.

PRIMARY AIR

The primary air regulation mechanism is used to light the fire or to boost the burning process, when you put wood on. The primary air can be used during a continious firing with hard wood like oak and beech. If you use softer wood types like birch and pine, the primary air can stay closed.

SECONDARY AIR

Secondary air is pre-heated and fed indirectly to the fire. At the same time, the secondary air flow cleans the glass pane to prevent build-up of soot. If you over-restrict the secondary airflow, soot can build up on the glass pane. The secondary air flow determines the heat output from your wood stove.

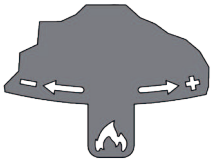

ADJUSTMENT OF PRIMARY- AND SECONDARY AIR/COLD STOVE

The primary air **(1)** is controlled by the lower damper (shown with a match and a small flame).

The secondary air **(2)** is controlled by the upper damper (shown with a big flame).

When firing a cold stove, pull both dampers to the right. The primary air damper will meet a stop **(3)**.
Lift up the handle for the primary air damper and then pull it all the way to the right **(4)**.

See our video about correct firing and adjustment of primary- and secondary air on www.scan.dk or scan the QR-code on next page.

ADJUSTMENT OF PRIMARY- AND SECONDARY AIR/WARM STOVE

When the stove is warm, adjust the primary- and secondary air dampers to 20/80 **(5)**.
As long as the stove is warm, the primary air is only to be adjusted within the area before the stop **(3)**.

Primary air: 0-20% at soft wood
Secondary air: 70-80%

Dampers for primary- and secondary air.

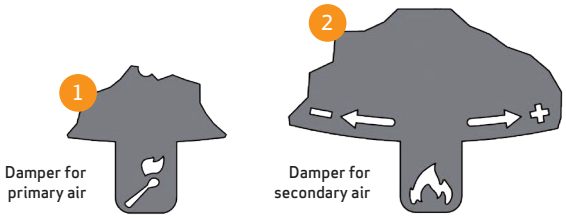

3 Pull the primary air damper to the right, until you reach a stop.

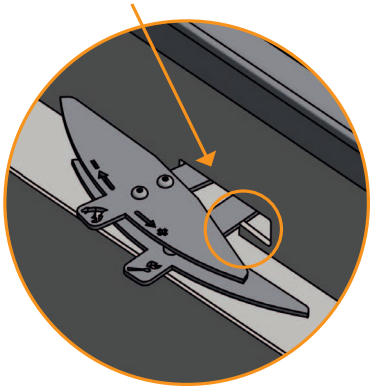

4 When firing a cold stove, lift the damper up over the stop and all the way to the right.

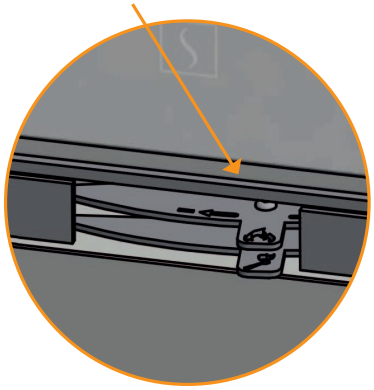

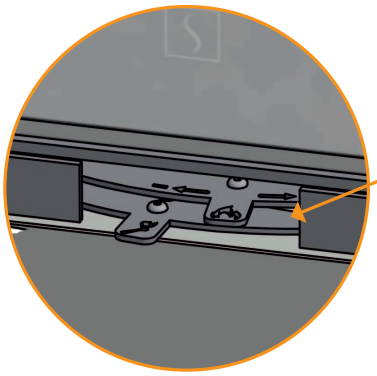

5 When the stove is warm, you can adjust the primary- and secondary air to:

20% primary air
80% secondary air

INSTRUCTIONS FOR HEATING

ENVIRONMENTALLY FRIENDLY OPERATION

Avoid turning down your wood-burning stove to the point where no flames are visible from the wood, as this leads to poor combustion and low efficiency. The gases released from the wood will not be burnt off due to the low temperature in the combustion chamber. Some of the gases will condense in the stove and flue system as soot, and this could lead to your chimney catching fire at a later point. The residual smoke which exits the chimney will pollute the surrounding area and cause an unpleasant smell.

NOTE!

No matter how good your chimney is, it will not perform well, if you do not use it correctly. Equally, a poor chimney may well give you acceptable results, if you use it correctly

LIGHTING

We recommend the use of fire lighters, or similar products, which are available from your Scan dealer. Using fire lighters helps light the wood more quickly and keeps the combustion process clean.

See our video about correct firing on www.scan.dk or scan the QR-code.

NOTE: Never use liquid lighting fuels!

Scan the QR-code and see our video about correct firing.

"TOP DOWN" LIGHTING

"Top down" lighting is a more environmentally friendly way of lighting the fire and helps to keep the glass area as clean as possible.
Do as follows for a correct "top down" lighting:

- 4 pieces of wood approx. 19-20 cm long with a weight of approx. 0.4-0.5 kg per piece.
- 12-20 thin pieces of firewood of about 19 cm in length, with a total weight of approx. 1 kg.
- 3-4 fire lighters.

1. Place the pieces of wood, firewood and fire lighters in the combustion chamber as shown below.
2. Set the primary and secondary air controls to maximum for 20-30 minutes (See "Instructions for use").
3. When the large pieces of wood have caught fire, you can adjust the primary- and secondary air to the desired level.

NOTE: The wood must not cover the bottom entirely and must never be placed higher than the tertiary holes at the rear of the burn chamber.

CONTINUOUS OPERATION

It is important to obtain as high a temperature as possible in the combustion chamber. This results in best possible use of the stove and fuel, as well as achieving clean combustion. In this way you will avoid build-up of soot on the combustion chamber lining and glass pane. During operation, you should not see any smoke; just a movement in the air that indicates combustion is in progress.

- After completing the lighting phase, you should have a good layer of embers in the stove; you can then start operation of it properly.
- Add two pieces of wood at a time: they should be about 0.4 to 0.6 kg in weight and about 20 cm long.

NOTE: The wood must catch fire quickly. This is why we recommend setting the primary air flow fully open.

NOTE: Operating the stove at too low a temperature and with too little primary air can lead to gases igniting, which can damage the stove.

- When adding wood, always open the glass door carefully to prevent smoke escaping.
- Never add wood, while the fire is burning nicely.

WARNING ABOUT OVER-FIRING

If the stove is continiously fired with larger amounts of wood than recommended and/or receives too much air, this can cause a heavy heat development liable to damage both stove and the surrounding walls. We therefore recommend that you always observe the max. recommended amount of fuel (See under "Technical Data").

FIRING IN THE SPRING OR AUTUMN

In the spring/autumn transition period, where there is less need for heating, we recommend you light the stove "top down" once, perhaps adding just two pieces of wood to ensure that the combustion chamber lining burns clean again.

THE FUNCTION OF THE CHIMNEY

The chimney is the wood-burning stove's motor; its performance determines how well your stove will work. The draught in the chimney creates negative pressure in the wood-burning stove. The negative pressure draws the smoke out of the stove and takes in air through the combustion air damper to fuel the combustion process. Combustion air is also used for the airwash system that keeps the glass clear of soot.

The draught in the chimney is created by the difference in temperature inside and outside the chimney. The higher the difference in temperature, the better the draught. This is why it is important that the chimney reaches operating temperature before you reduce the damper settings to restrict combustion in the stove (a brickwork chimney will take longer to reach operating temperature than a steel chimney). It is very important that the operating temperature is reached as quickly as possible on days when the draught in the chimney is poor due to unfavourable wind and weather conditions. You need to get a few flames going as quickly as possible. Chop the wood extra thin; use an extra fire lighter etc.

- After longer periods without use, you must check the chimney flue for blockages.
- You can connect several units to the same chimney. You should however first check the relevant regulations in this respect.

USING THE STOVE IN VARIOUS WEATHER CONDITIONS

The way the wind affects the chimney can have a big impact on how your stove reacts under various wind loads; you may need to adjust the airflow to achieve good combustion. Fitting a damper in the flue pipe may also help, as it will allow you to regulate the draught under changing wind loads.

Fog and mist can also have a big impact on chimney draught; you may need to use other settings for the combustion air to achieve good combustion.

GENERAL NOTES

PLEASE NOTE! Parts of the wood-burning stove, especially the outer surfaces, become hot during use. Due care should be exercised.

- Never empty ashes into a flammable container. Ashes can contain glowing embers long after you finish operating the stove.
- When the stove is not in use you can close the dampers to avoid a draught through the stove.
- If the stove has not been used for some time, you should check the flue passageways for potential blockages before relighting.

NOTE: Never place flammable material in the radiation zone of the stove!

CHIMNEY FIRE

In the event of a chimney fire, keep the stove door, ash drawer, and all dampers on the stove closed. In an emergency, call the fire service.

- We recommend that you get a chimney sweep to check the chimney before using the stove again.

HANDLING OF THE FUEL

SELECTING WOOD/FUEL

You can use any type of wood as fuel. However harder woods, such as beech or ash, are generally better for heating, as they burn more evenly and create less ash. Other woods, such as maple, birch and spruce, are excellent alternatives.

PREPARATION

The best fuel is obtained where the tree has been felled and the wood sawn and split before May 1st. Remember to cut the wood to match the size of the combustion chamber. We recommend a diameter of 6-10 cm. The length should be about 6 cm shorter than that of the combustion chamber to leave enough space for air to circulate. If the diameter of the wood is greater than the above, it should be split down its length. Wood that has been split dries faster.

STORING

You need to store the sawn and split wood in a dry place for 1-2 years before it will be dry enough to burn. Wood dries faster if you stack it in an airy place. Before using it, it is a good idea to store the wood for a few days at room temperature. Remember that wood absorbs moisture from the air during autumn and winter.

MOISTURE

To avoid problematic impact on the environment and to ensure optimum operating economy, the wood should be perfectly dry before it can be used as fuel. If you use wood that is too damp, most of the heat it produces will be used up in evaporating the water. The stove will accordingly not increase in temperature, nor emit heat to the room as a result. This is obviously poor economy, and it will cause soot build-up on the glass pane, in the stove and in the chimney. Operation using moist wood also pollutes the environment.

- Maximum wood moisture content should not exceed 20%. A moisture content of 15-18% will deliver best efficiency.
- An easy way of checking wood moisture content is to knock the ends of the two pieces of wood together. If the wood is moist, the sound will be slightly muffled.

USE OF THE FOLLOWING AS FUEL IS ILLEGAL

NOTE: It is absolutely prohibited to fire with painted, pressure impregnated or glued wood, or sea driftwood. Nor should you ever burn chipboard, plastics, or treated paper. These contain substances that are hazardous to human health, to the environment, your stove, and your chimney. In short - make sure you only use proper wood.

CALORIFIC VALUE OF THE WOOD

The various woods have different calorific values. In other words, for certain species of wood, you will need to use a greater quantity to achieve the same heating performance. This Instuction Manual assumes that you will be using beach, which has a very high calorific value and is also the easiest wood to get hold on. If you use oak or beech as fuel, you need to bear in mind that these wood types have a greater calorific value than for example birch. To avoid any risk of damage to the stove, you should therefore make sure to use less fuel in these cases.

Wood types	kg Drywood/m^3	Compared to beech
Hornbeam	640	110%
Beech/Oak	580	100%
Ash	570	98%
Maple	540	93%
Birch	510	88%
Pine	480	83%
Fir	390	67%
Poplar	380	65%

MAINTENANCE

SWEEPING THE CHIMNEY AND CLEANING THE STOVE

Follow national and local regulations for sweeping the chimney. We recommend having the stove cleaned regularly by a chimney sweep.

Before cleaning the stove and sweeping the chimney, the baffle plate must be removed (See "Removing the baffle plate").

NOTE: All service and reparation must be done, when the stove is cold.

CHECKING THE STOVE

Scan A/S recommends that you check your stove thoroughly after sweeping/cleaning. Check all visible surfaces for cracks. Check that all joints are tight and that the gaskets are correctly seated. Worn or deformed gaskets should be replaced.

SERVICING

We recommend that the stove is thoroughly serviced at least every two years by a qualified fitter. Remember only to use original spare parts.

The service should include the following:

- Lubricate hinges using copper grease.
- Check the gaskets. Replace any that are broken or have turned hart.
- Check the combustion chamber lining and the grate.
- Check heat-insulating materials.

COMBUSTION CHAMBER LINING

Slight cracks can appear in the combustion chamber lining due to moisture or sudden heating/cooling. These cracks have no influence on the output or lifetime of your stove. However, if the lining starts to crumble and fall out, you must replace it.

The combustion chamber lining is not covered by the warranty.

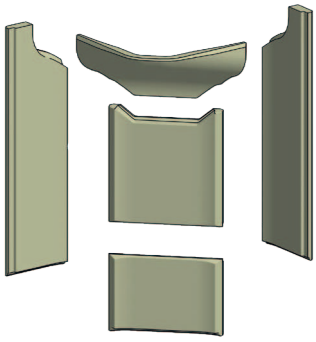

Combustion chamber lining

GASKETS

All wood-burning stoves have seals made of ceramic material fitted to the stove, the door and/or the glass. These seals are subject to wear and tear and must be replaced when necessary.

Gaskets are not covered by the warranty.

PAINTED SURFACES

Clean your wood-burning stove by wiping it down with a dry, lint-free cloth.

If the paint finish gets damaged, you can purchase repair paint in spray form from your Scan dealer. As slight differences in colour shade are possible, we recommend you spray a larger area to achieve a natural blend. For best results, apply repair spray when the stove is warm enough for you to just keep your hand on it, but no hotter.

NOTE: Make sure to air the room thoroughly after applying spray paint.

CLEANING THE GLASS

Our wood-burning stoves are designed to prevent serious soot build-up on the glass. The best way to achieve this is to make sure you have a good supply of combustion air. It is also very important that the wood is dry and the chimney correctly dimensioned.

Even if you operate the stove in accordance with our instructions, a slight film of soot may still accumulate on the glass. You can easily remove this film by wiping the glass down with a dry cloth and then with a cloth dampened with glass cleaner.

- Please note that the glass cleaner is not to get into contact with the gaskets, as this can discolour the glass permanently.
- The glass cleaner must not come into contact with the painted surfaces, as these can be damaged.

REMOVING THE BAFFLE PLATE AND THE BAFFLE UNIT

Be very careful when removing the baffle plate from the stove.

After the baffle plate has been removed, the baffle unit can be dismounted.

Lift up the baffle unit a little and tip it slightly backwards until it is free of the hole **(1)**. Then slowly pull out the unit, until it is free of the rear rails **(2)**.

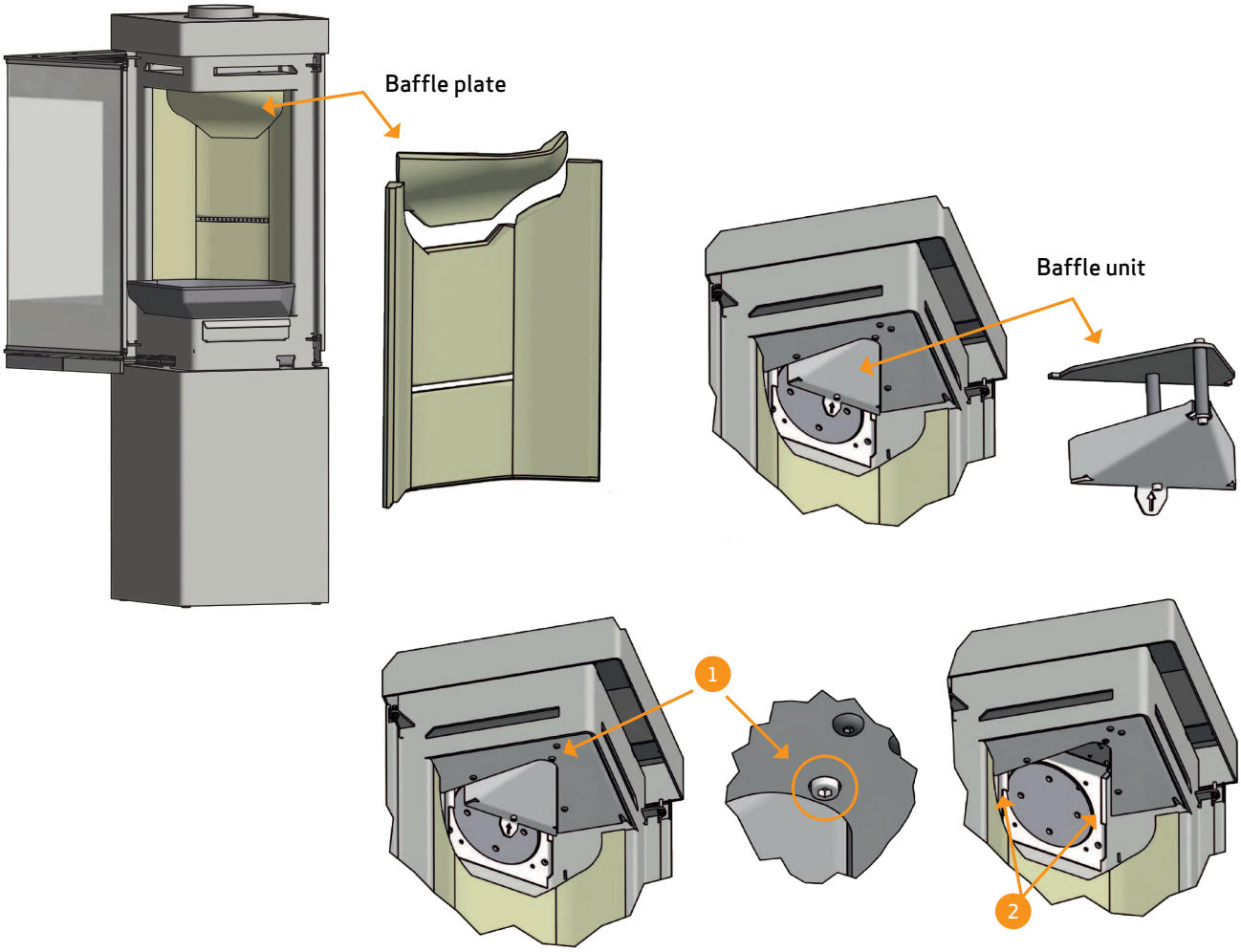

DISPOSAL OF STOVE PARTS

Steel/cast iron	Send for recycling
Glass	Dispose of as ceramic waste
Combustion chamber lining	Vermiculite and chamotte are not recyclable. Dispose of as waste.
Baffle plate	Vermiculite is not recyclable. Dispose of as waste.
Gaskets	Dispose of as waste

TROUBLESHOOTING

SMOKE ESCAPING

- Damp wood
- Chimney is not properly dimensioned for the stove
- Is the chimney the right height for its surroundings?
- At rear outlet, check that the flue pipe does not obstruct the chimney draught
- Chimney not drawing properly
- Check if the smoke gas pipe/chimney are blocked
- Vacuum in the room
- The door is opened before the embers have burned down sufficiently

WOOD BURNING TOO QUICKLY

- The air valves are set incorrectly
- Inferior firewood (wast wood, pallets etc.)
- The baffle plate is incorrectly mounted or missing
- Too much chimney draught

SOOT BUILD-UP ON GLASS

- Incorrect secondary airflow setting
- Damp wood
- Inferior firewood (waste wood, pallets etc.)
- Excessive primary air
- Wood pieces too large for lighting
- Chimney not drawing sufficiently

WHITE SHADOW ON THE INSIDE OF THE GLASS

- Over-firing (See "Instructions for heating")
- Vacuum in the room
- Too much primary air

EXCESSIVE SOOT BUID-UP IN CHIMNEY

- Poor burning (more air is required)
- Damp wood

THE SURFACE OF THE STOVE IS TURNING GREY

- Over-firing (See "Instructions for heating")

POOR HEATING PERFORMANCE OF STOVE

- Damp wood
- Inferior wood quality with low calorific value
- Not enough wood
- The baffle plates are not fitted correctly

SMELL AND SOUND OF THE STOVE

- The lacquer on the stove hardens, when you use the stove for the first time; this can cause an odour. Open a window or a door for ventilation and make sure that the stove is heated up sufficiently to avoid odours later.
- When heating up and cooling down, the stove may make some clicking noises. These are due to the huge temperature differences to which the material is exposed and do not indicate any product defects.

WARRANTY

All wood-fired Scan products are made of high-quality materials and subject to strict quality controls before leaving the factory. We give a warranty of 5 years on manufacturing errors or defects.

You must quote your stove's product registration number when you contact us or your authorised Scan dealer with a warranty claim.

The warranty covers all parts which in the opinion of Scan A/S require repair or replacement due to manufacturing or construction error

The warranty applies to the original purchaser of the product only, and is not transferable (except on prior sale).

The warranty covers only damage caused by manufacturing or construction errors.

THE FOLLOWING PARTS ARE NOT COVERED BY THE WARRANTY

- Wear and tear parts, such as the combustion chamber liners, baffle plates, riddling grate, glass, and seals (except for defects which were present on delivery).
- Defects caused by external chemical and physical influences during transportation, storage and assembly, or at a later time.
- Soot build-up caused by poor chimney draught, damp wood, or improper use.
- Costs of additional heating in connection with a repair.
- Transport costs.
- Costs for setting up or removing the wood stove.

THIS WARRANTY IS VOID

- In case of incorrect installation (the installer is responsible for observing and complying with legal requirements and local bylaws, along with this Assembly- and Instructionsmanual for the wood-burning stove and accessories).
- In case of improper use, and/or use of prohibited fuels, non-original spares (see this Assembly- and instructions manual).
- If the product registration number of the stove has been removed or damaged.
- In case of repairs that do not comply with our instructions or instructions by an authorised Scan dealer.
- In case of any manipulation of the original state of this Scan product or its accessories.
- This warranty is only valid in the country to which this Scan product was originally supplied.

NOTES

Product registration number

Quote this number at all enquiries