Scan 85 series

Congratulations on your new Scan wood-burning stove

You have purchased a product by one of Europe's leading manufacturer's of wood-burning stoves, and we are sure that you will have years of pleasure with your purchase. To make the best possible use of your stove, it is important that you follow our advice and instructions.

Please read this Assembly- and instructions manual before you start to assemble your stove.

Product registration number

Please indicate the product registration number at any enquiry

Table of contents

Technical data 3

Installation
Safety
Technical data and dimensions
Dimension sketches
Type plate
Loose parts
Additional accessories

Assembly 7

Remove packaging
Handles
Product registration number
Positioning your wood-burning stove
Positioning near to non-flammable materials
Distance to furniture
Distance to flammable materials
Load bearing foundation
Floor plates
Existing chimney and pre-fabricated element chimney
Connection between stove and steel chimney
Requirements for chimney
Connection with 90° elbow pipe
Adjustment screws
Connection piece / top outlet
Connection piece / rear outlet
Height adjustment of top module
Fresh air intake
Closed combustion system
Ash container
Heat-storage stones

Instruction for use 20

CB technique
Primary air
Secondary air
Baffle plates
Ash container
Handle for riddling grate

Instructions for heating 21

Lighting
Handling fuel

Maintenance 23

Servicing 24

Troubleshooting 27

Installation

The house owner is responsible for ensuring that all necessary national and local safety measures are observed during installation and fitting and also responsible for observing the fitting and operating instructions detailed in this manual.

When you install any kind of fireplace or stove, you must inform the local authorities. You are also responsible for calling in a chimney sweep to inspect and authorize the installation.

To ensure best-possible functionality and safety for your installation, we advise you to call a professional fitter. Our Scan Dealer will be able to recommend a qualified fitter in your area. For information on Scan Dealers, please go to www.scan.dk.

Safety

Any changes made to the product by the dealer, installer or user could result in the product and safety functions not functioning as intended. The same applies to the fitting of accessories or extra equipment not supplied by Scan A/S. This could also be the case if parts that are necessary for the operation and safety of the stove are dismantled or removed.

The DoP declaration of performance is available from scan.dk

The Scan 85 series comprises:

Scan 85-1: Stove with handles and trims in black aluminium

Scan 85-2: Stove with handles and trims in brushed aluminium

Scan 85-3: Stove Maxi with handles and trims in black aluminium

Scan 85-4: Stove Maxi with handles and trims in brushed aluminium

Scan 85-5: Stove High Top with handles and trims in black aluminium

Scan 85-6: Stove High Top with handles and trims in brushed aluminium

Scan 85-7: Stove High Base with handles and trims in black aluminium

Scan 85-8: Stove High Base with handles and trims in brushed aluminium

Scan 85-1/2

Scan 85-3/4

Scan 85-5/6

Scan 85-7/8

Dimension sketch Scan 85-1 + Scan 85-2

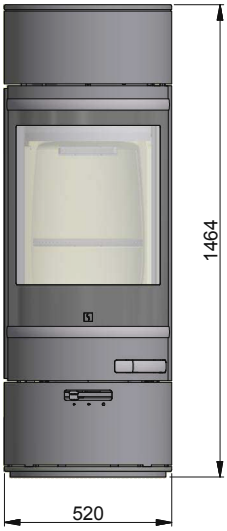

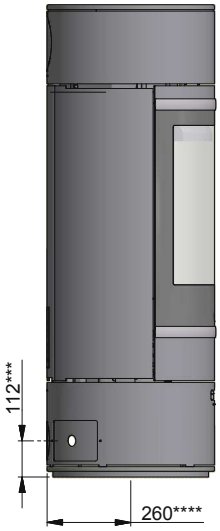

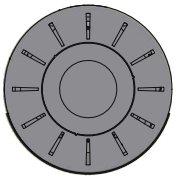

* Height to the beginning of the connecting piece at top outlet

** Centre rear outlet

*** Centre of fresh air intake rear

**** Centre of fresh air intake bottom

Dimension sketch Scan 85-3 + Scan 85-4

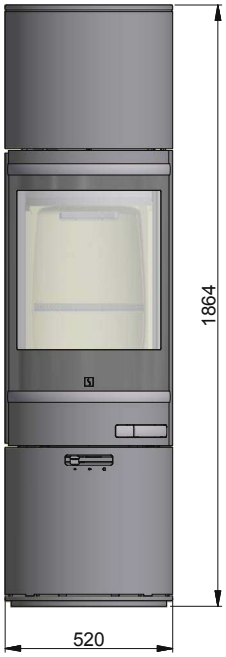

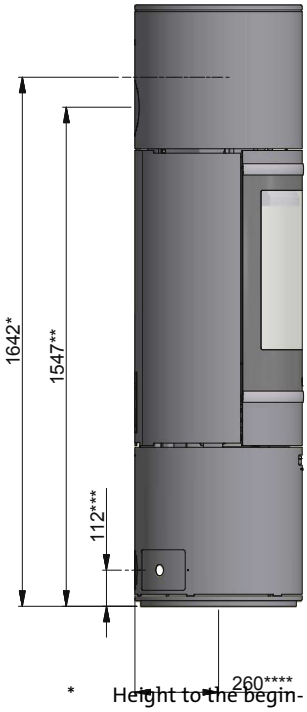

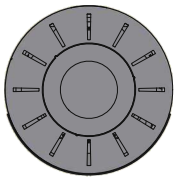

* Height to the beginning of the connecting piece at top outlet

** Centre rear outlet

*** Centre of fresh air intake rear

**** Centre of fresh air intake bottom

Dimension sketch Scan 85 Maxi

Dimension sketch Scan 85-5 + Scan 85-6

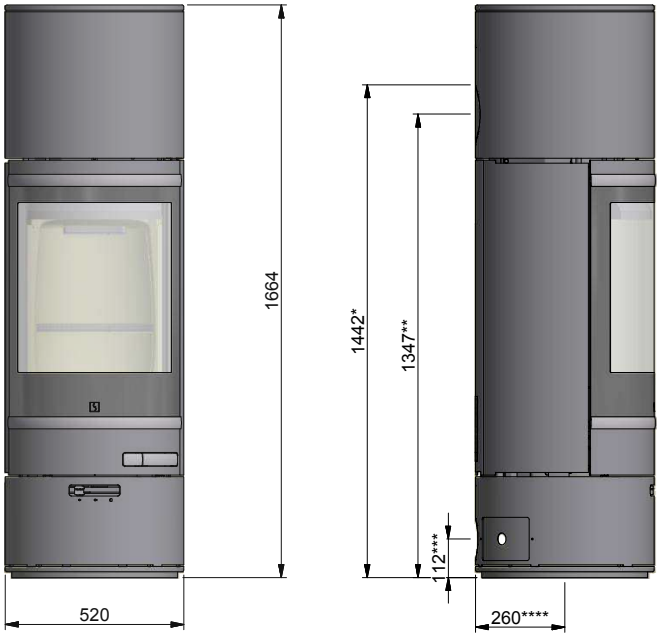

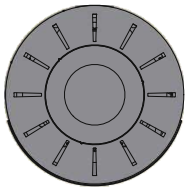

* Height to the beginning of the connecting piece at top outlet

** Centre rear outlet

*** Centre of fresh air intake rear

**** Centre of fresh air intake bottom

Dimension sketch Scan 85-7 + Scan 85-8

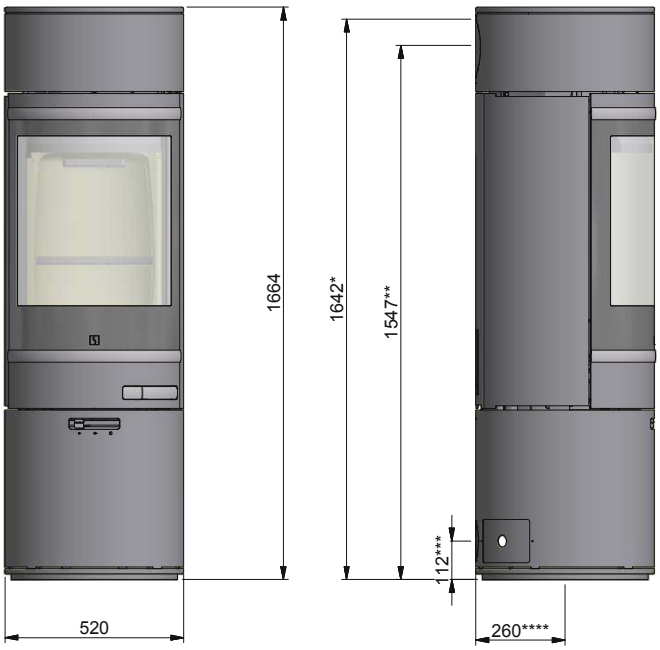

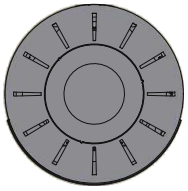

* Height to the beginning of the connecting piece at top outlet

** Centre rear outlet

*** Centre of fresh air intake rear

**** Centre of fresh air intake bottom

Technical data and dimensions

Materials: ..... Steel plate, cast iron, galvanised sheet, skamolex, chamotte

Surface treatment: ..... Senotherm

Max. log length when heating with horizontal logs: ..... 30 cm

Max. log length when stoking with vertical logs: ..... 50 cm

Weight Scan 85: .....204 kg - 220 kg

Connecting piece internal diameter: ..... 144 mm

Connecting piece external diameter: ..... 148 mm

Approval type: ..... Intermittent fuelling

Test in compliance with EN 13240

CO Emission at 13% O_2: ..... 0,06% ..... 801 mg/Nm^3

Dust @ 13% O_2: ..... 7 mg/Nm^3

No_x @ 13% O_2: ..... 87 mg/Nm^3

Efficiency: 78%

Energy efficiency index: 104,1

Energy efficiency class: ..... A

Nominel output: ..... 8 kW

Chimney temperature EN 13240: ..... 272 °C

Amount of smoke: ..... 7,8 g/sek

Sub-pressure EN 13240: ..... 12 Pa

Recommended sub-pressure in connecting piece: ..... 18-20 Pa

Required combustion air supply: ..... 27,1 Nm^3/h

Fuel: ..... Wood

Fuel consumption: ..... 2,5 kg/h

Amount of fuel: ..... 2,2 kg

Intermittent fuelling means normal use of a woodstove. In other words, you should let the fire die down until only the embers are left, before refuelling.

Scan 85 series was build in compliance with the homologized product type specified in the Assembly- and Instructions Manual provided with the product.

The DoP declaration of Performance is available from http://scan.dk

Type plate

All Scan wood-burning stoves are fitted with a type plate, that specifies the approval standards and the distance to flammable materials.

Scan 85-Series
Freestanding room heater fired by solid fuel

Standard: EN 13240 DoP 90585600

Minimum distance to combustible materials:

Side: 600 mm - Back: 100 mm - Top: 600 mm - Front: 1000 mm

CO emission at 13% O2:	0,06%	801 mg/Nm³
Dust at 13% O2:		7 mg/Nm³
Flue gas temperature:		272°C
Nominal heat output:		8 kW
Efficiency:		78%
Fuel type:		Wood
Operation type:		Intermittent

The appliance can be operated in a shared flue.

Country	Classification		Certificate/Standard		Approved by
EUR	Intermittent		EN 13240		Teknologisk Institut
Norway	Klasse 2		300-ELAB-1381-NS		Teknologisk Institut
Austria			300-ELAB-1381-ØS		Teknologisk Institut
Schweiz	LRV 11		VKF	Nr. 22520	Teknologisk Institut
Germany	BStV	1	300-ELAB-1381-EN		Teknologisk Institut

Angaben für Österreich

Wärmeleistungsbereich:	4,0 - 8,0 kW
Brennstoffwärmeleistung:	8 kW
Zulässige Brennstoffe:	Scheitholz
Prüfbericht:	Teknologisk institut

Follow assembly- and instructions manual.
Use only recommended fuels.
Montage- und Bedienungsanleitung beachten.
Verwenden Sie nur empfohlene Brennstoffe.

1000 Scan A/S DK 5492 Vissenbjerg 03-2014

Loose parts

The flue connection piece and other loose parts are located in the stove's combustion chamber.

Scan 85, all types:

- x4 screws for fastening flue connection piece
- Gasket for flue connection piece
- Glove
- Repair lacquer for coloured stoves

Additional accessories

- Large shaped floor plate in steel (not for corner installation)
- Large base floor plate in glass (not for corner installation)
- Small shaped floor plate in glass or steel (not for corner installation)
- Heat-storage stones Scan 85-3, 85-4, 85-5 og 85-6

Remove packaging

Check that the stove is not damaged before installing it.

The Scan 85 is fixed onto the pallet at the delivery. The four screws securing the stove may be removed through the two inspection hatches in the base.

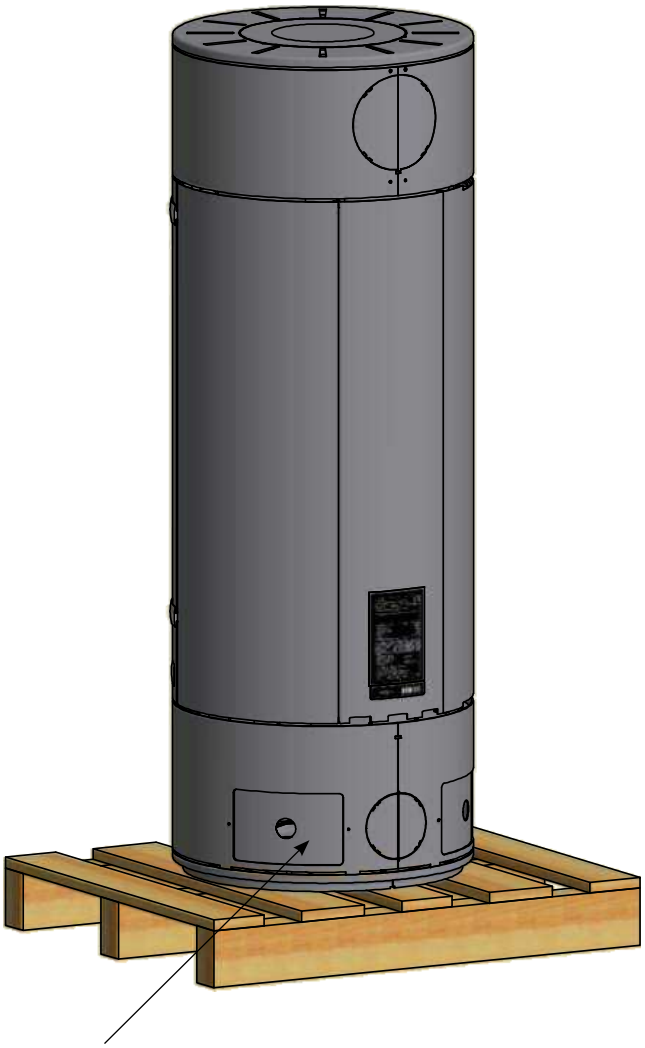

Inspection hatch

Inspection hatches

Lift the inspection hatches free from their mounts.

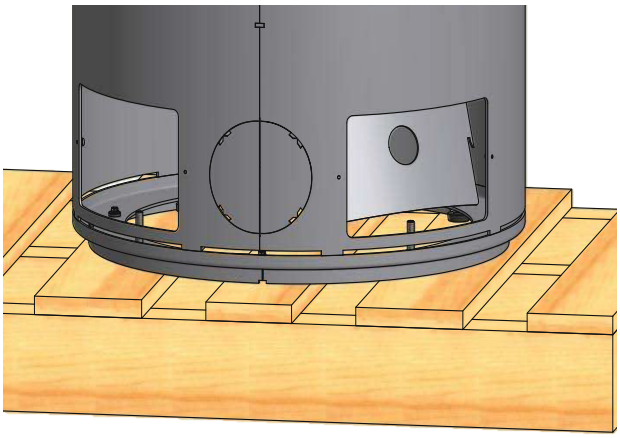

Remove the inspection hatches from the stove.

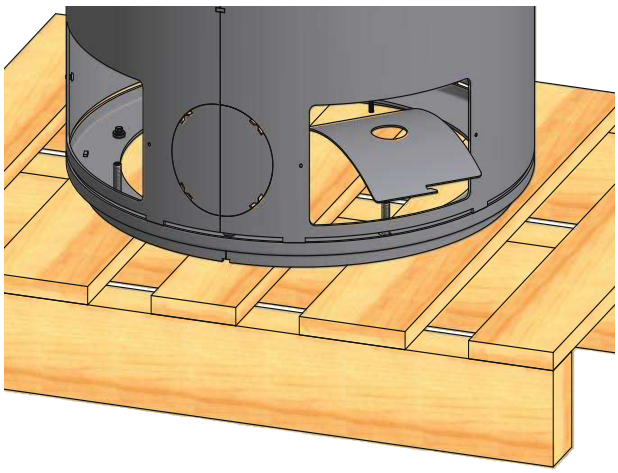

Remove the screws securing the stove to the pallet.

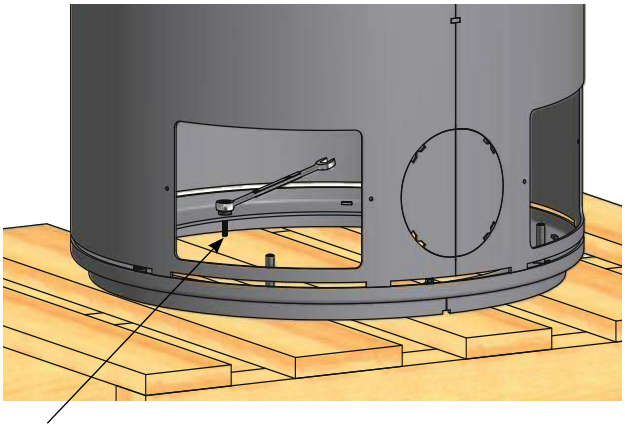

Screws to be removed

Handles

To open the door of the Scan 85, press the handle release to the left of the handle. The handle will pop out, ant the door can be **pulled** to side. The door must roll on the ball bearings.

Important: Do not lift the door, as this can push the ball bearings into a false position!

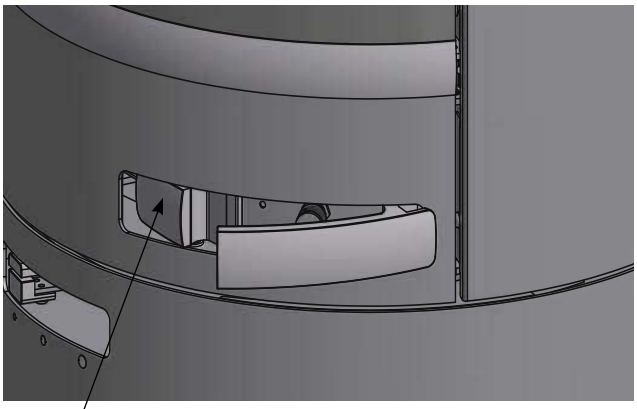

Handle release

Product registration number

All Scan wood-burning stoves are provided with a product registration number.
The product registration number is located at the rear of the stove.

Please make a note of this number at the frontpage; you will always need to quote it when contacting your dealer or Scan A/S.

Product registration number

Positioning your wood-burning stove

The wood-burning stove must be set up so that the stove itself, the flue pipe, and the chimney can all be cleaned.

Position near to non-flammable walls

When positioning near a non-flammable wall, we recommend you keep a minimum distance of 50 mm between the rear of the product and the wall for cleaning purposes.

Distance to furniture: 1000 mm

But please check to avoid furniture or other furnishings being dried out due to being too close to the stove.

Distance to flammable materials

Parallel rear wall installation

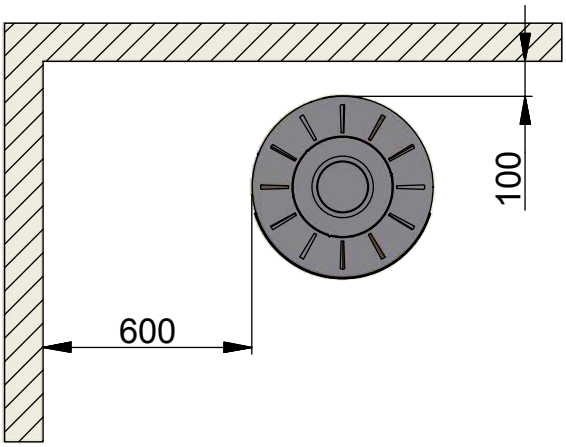

45° Corner installation

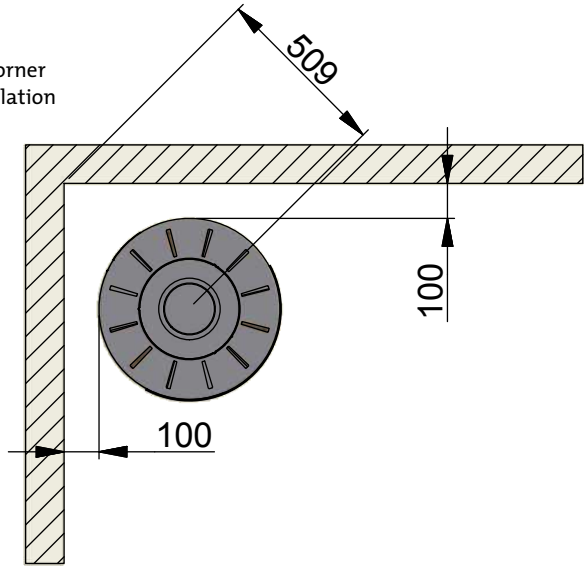

Flammable material

Load bearing foundation

The stoves of the Scan 85 series weigh from 204 kg to 220 kg. You should therefore make sure that the foundation can bear the weight of the wood-burning stove and that of the chimney.

Floor plate

If you are setting up the stove on a flammable floor, observe national and local regulations on the size of the non-flammable foundation that covers the floor around the stove.
Your local Scan dealer can advise you on regulations concerning flammable materials in the vicinity of your stove.

The idea behind the floor plate is that it protects the floor and flammable material against sparks.
The floor plate can be made of steel or glass, and the stove can be set up on brick, natural stone or similar materials.

This Scan wood-burning stove has an integrated floor plate, and can thus be set up on any flammable material without a protective foundation.

Small shaped floor plate for the Scan 85 series

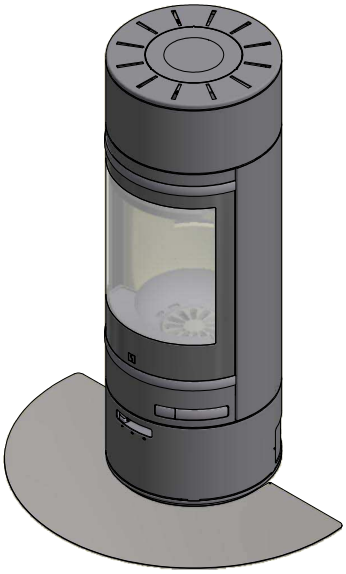

Large shaped floor plate in steel or large base floor plate in glass for the Scan 85 series

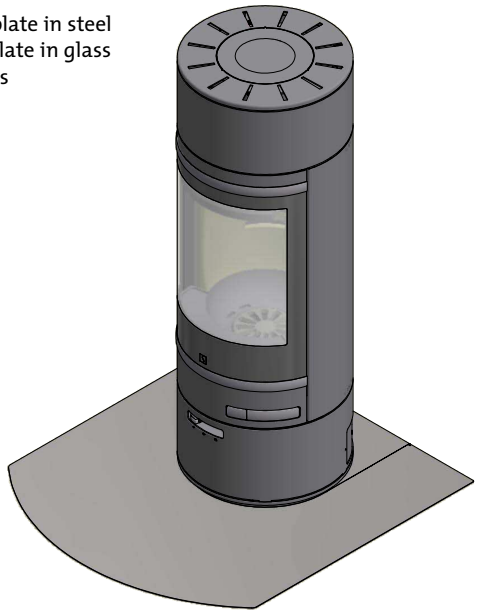

Existing chimney and pre-fabricated element chimney

If you intend to connect your stove to an existing chimney, it makes sense to contact an authorised Scan dealer, or a local chimney sweep for advice. These experts will also let you know if your flue needs renovating.

When connecting a pre-fabricated element chimney, follow the manufacturer's connection instructions for the relevant chimney type.

Connection between stove and steel chimney

Your Scan dealer, or local chimney sweep, can advise you on choosing a make and type of steel chimney. This ensures that the chimney will match your wood-burning stove. As a general rule, the length of the flue should not be less than 4 m measured from the top of the wood-burning stove.

Some weather or installation conditions might require another length.

Choosing the wrong length or diameter of steel chimney could impair the functionality.

Always observe the chimney vendor's instructions precisely.

Requirements for chimney

The chimney must be labelled T400 and G for soot testing.

Connection with 90° elbow pipe

If you connect the Scan 85 with an elbow pipe, you should use a curved elbow, as this gives a better draught.

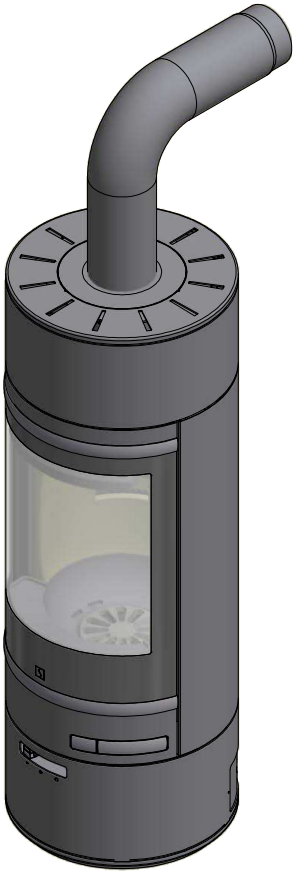

Adjustment screws

The Scan 85 has four adjustment screws under the wood-burning stove. Use the adjustment screws to get the stove to stand vertically.

The adjustment screws can be adjusted through the inspection hatches in the base using the delivered key.

B

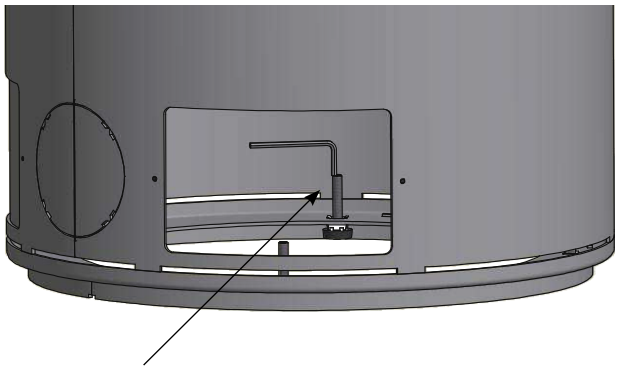

Connection piece / top outlet

The stove is prepared from the factory for top outlet

The connecting piece is placed loosely in the top outlet of the stove. The gasket and screws can be found in the stove's combustion chamber.

Lift the top module and flue connection piece from the stove.

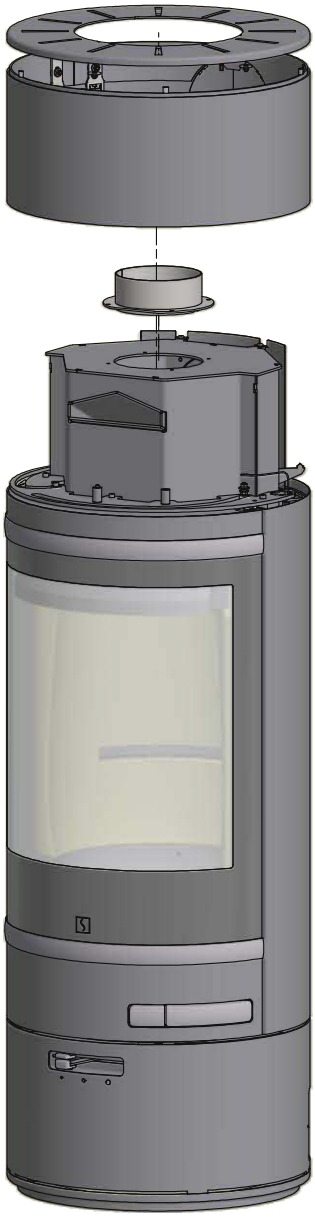

Mount the ceramic gasket on the connecting piece

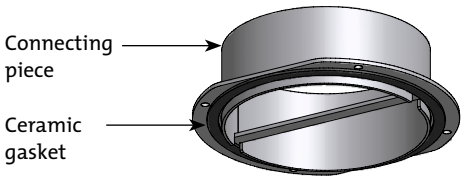

Fasten the flue connection piece with the delivered screws and remount the top module.

C

4 pcs. M6x10 mm set screws

Connection piece / rear outlet

The stove is prepared from the factory for top outlet

To remove the cover plate for the rear outlet, you can place a flat screwdriver or wire-cutter in the holes as illustrated below.

Tilt the screwdriver downwards, and the cover plate will loosen.

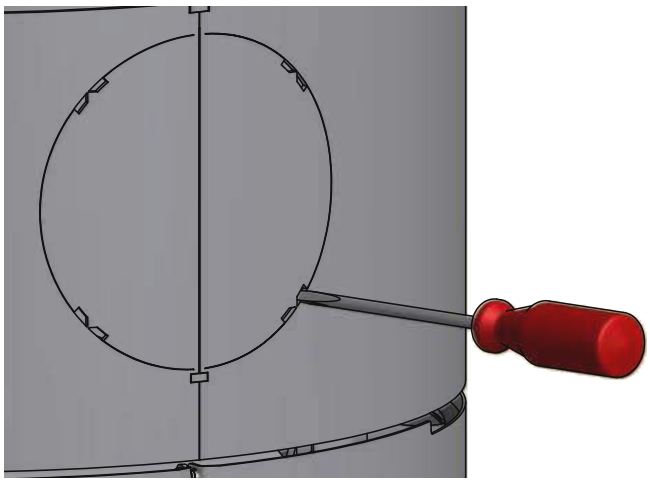

Tilt the wire-cutter downwards, and the cover plate will loosen.

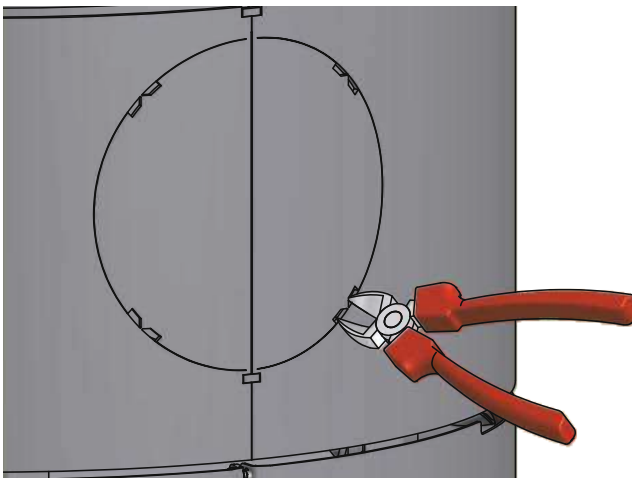

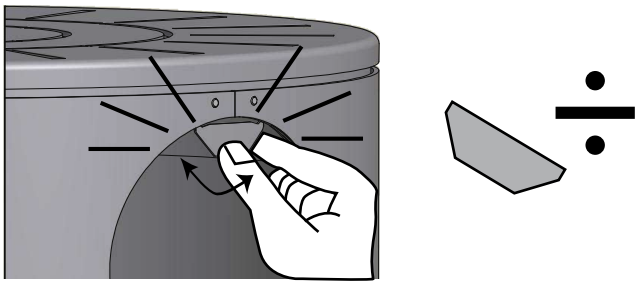

The connecting piece is placed loosely in the top outlet of the stove. The gasket and screws for the connecting piece can be found in the stove's combustion chamber.

Lift the top module and the connecting piece from the stove so that the cover plate in the heat shield can be removed.

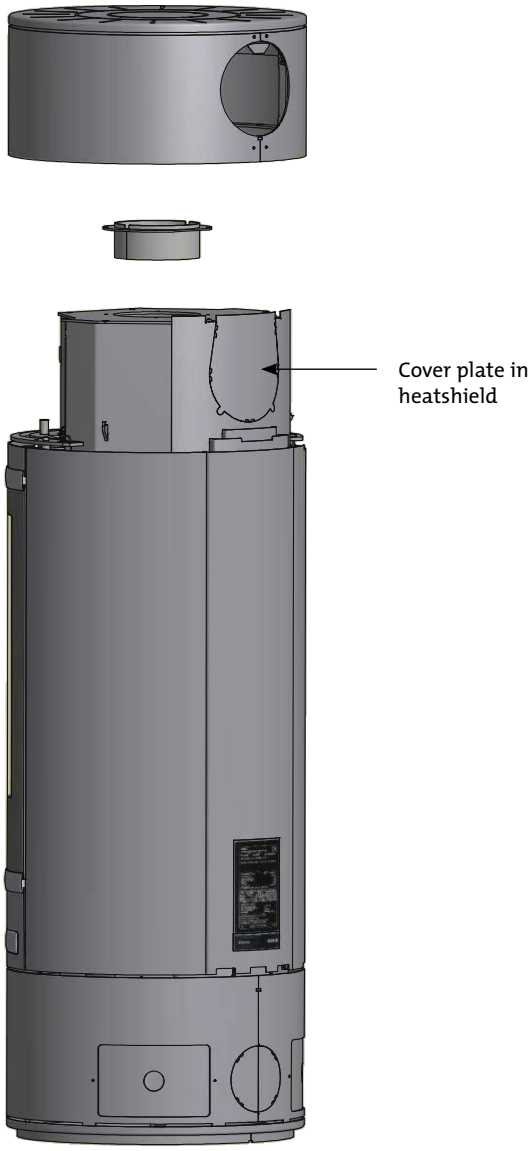

Remove the cover plate on the heat shield in the same way as the cover plate on the stove.

Flat screwdriver

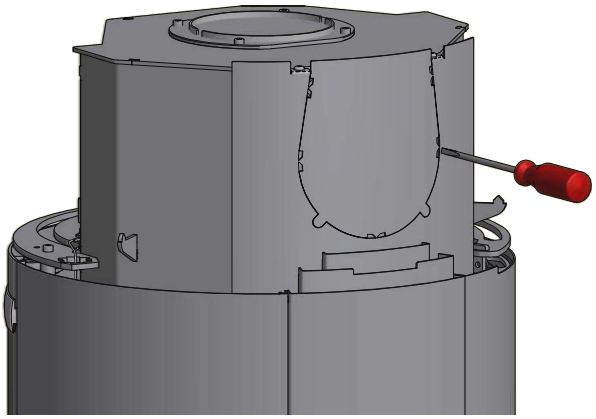

Wire cutter

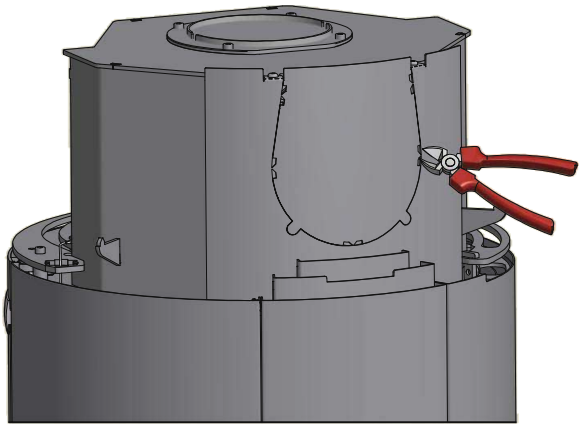

Mount the ceramic gasket on the connecting piece

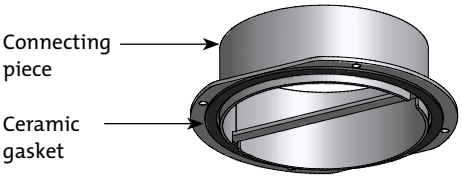

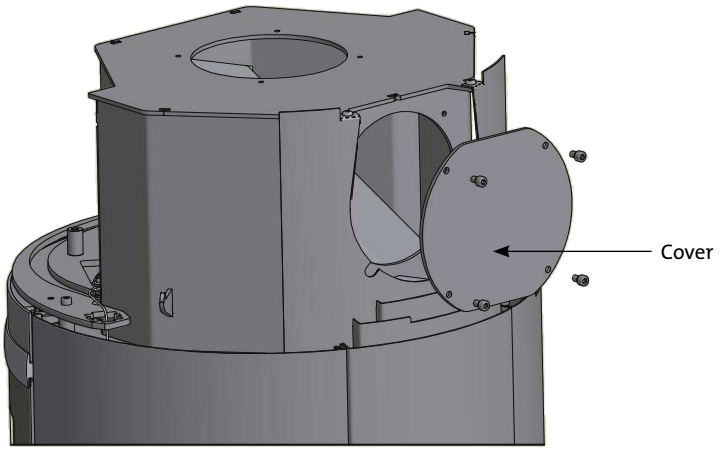

Fix the connecting piece using the 4 delivered screws and hook the heat shield back onto the stove.

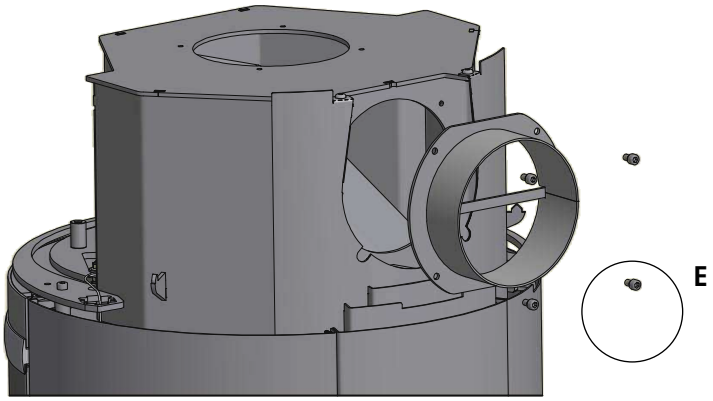

E 4 pcs. M6x10 mm set screw

Fit the cover in the top outlet and tighten it.

Remount the top module.

Height adjustment of the top module

The height of the stove's top module can be adjusted. Open the door. Adjust the height with the pointed screw using an Allen key, see illustrations below.

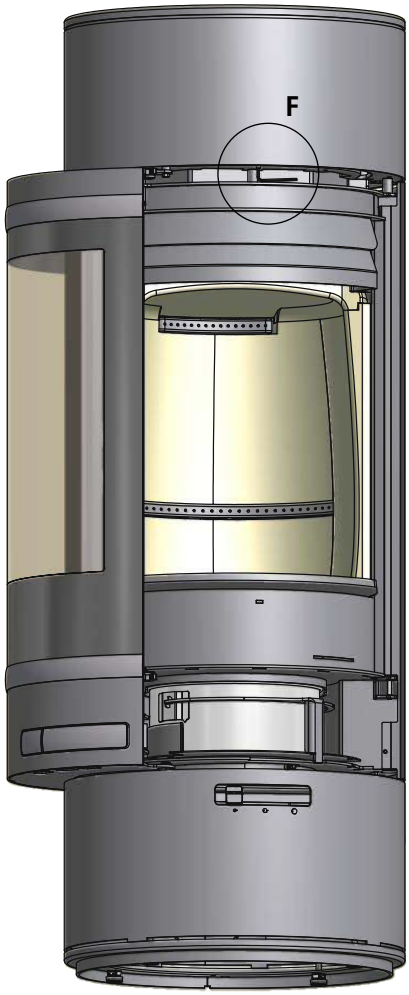

F

Fresh air intake

In a well-insulated house, the air used up by the burning process has to be replaced. This particularly applies to houses with mechanical ventilation. There are different ways of making sure that an air exchange takes place. The most important thing is to ensure that there is a supply of air to the room where the wood stove is located. The external wall vent must be located as close to the wood stove as possible, and you must be able to close it when you are not using the wood stove.

National and local building regulations must be followed with regard to the connection of fresh-air intake.

Closed combustion system

If you have decided to use the stove's closed combustion system, connect the external combustion air using a ventilation pipe passing through the wall or floor.

It must be possible to shut off the ventilation pipe with a valve, when the stove is not in use.

- Minimum Ø100 mm ventilation pipe, maximum length: 6 m with a maximum of one bend

NOTE: if the stove has a fresh air connection or closed combustion, the ventilation pipe must be open, when the stove is in use!

Remove the cover plate from the base as shown on page 13. Connect the outside air to the connection piece underneath the combustion chamber.

Ash container

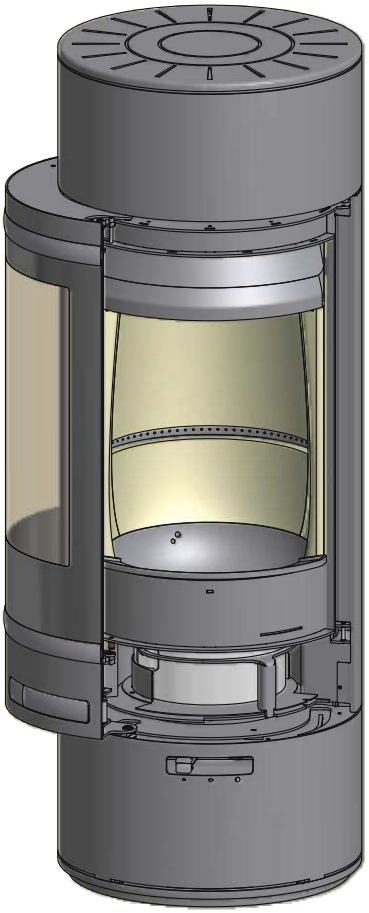

Ash container in closed position

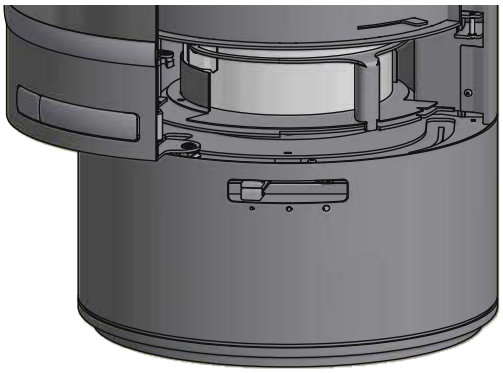

Ash container in open position

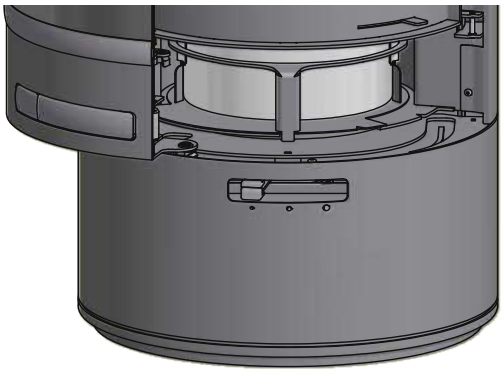

Removal of the ash container from the stove.

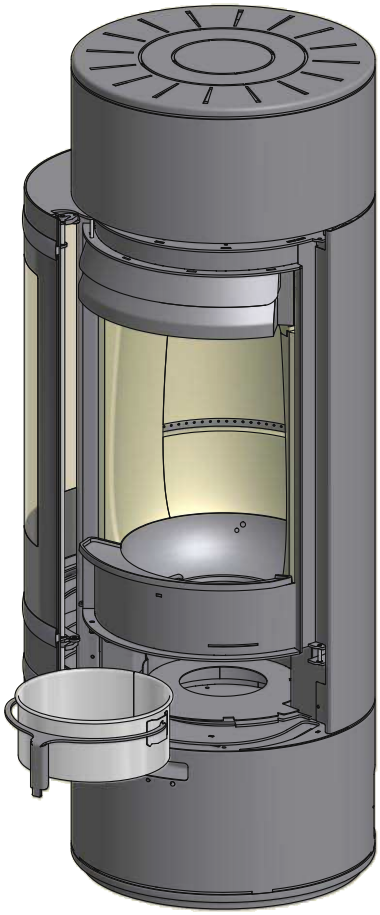

The handle on the ash container can be flipped up and used to carry the ash container.

In order to put back the ash container in the stove, place the guide mounting in the positioning hole. Turn the ash container so that the handle is in the closed position.

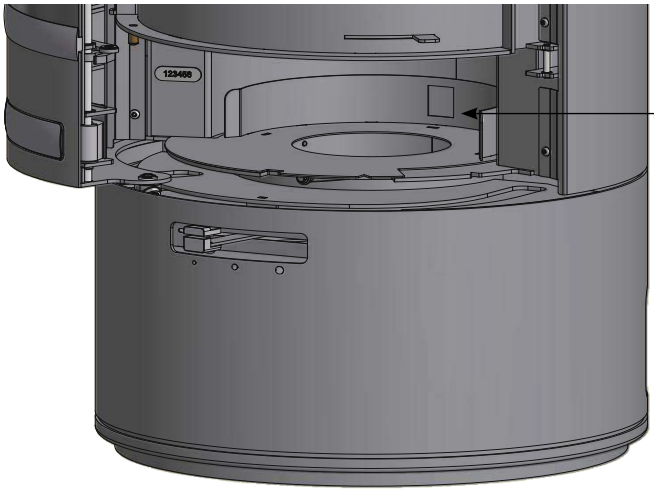

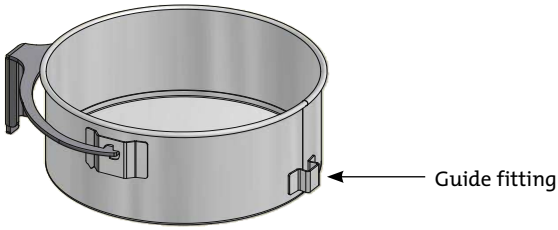

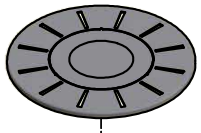

Heat-storage stones

Heat-storage stones for Scan 85 (Scan 85-3 / 85-4 / 85-5 / 85-6) are made from a special material with a high heat capacity. The stones are heated when the stove is on, re-releasing heat once it is off. This extends the time in which the stove remains warm.

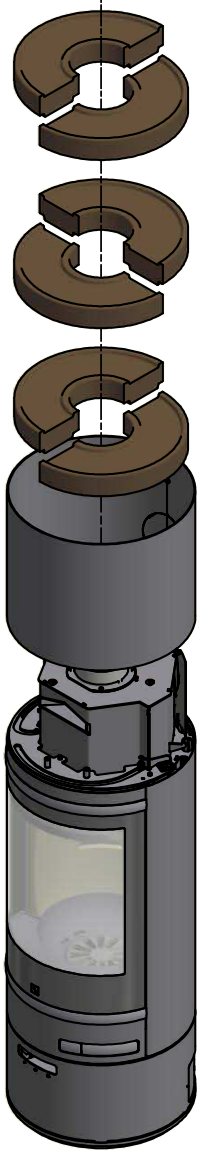

CB-technique (Clean Burning)

The wood-burning stove is equipped with CB technology. In order to ensure an optimal combustion of released gases under the incineration process, air will pass through a specially developed canal system. The heated air is led into the combustion chamber through the small holes at the rear of the burn chamber. This airflow is driven by the combustion rate and thus cannot be regulated.

Primary air

The primary air regulation mechanism is used for lighting the fire, or to boost the burning process when you put wood on. The primary air vent can be 30 - 80% open if you use hard wood fuel such as oak and beech. You can close the primary air vent if you use soft wood such as birch or pine for fuel.

Settings for normal load: 30 - 50%

Secondary air

Secondary air is pre-heated and fed indirectly to the fire. At the same time, the secondary airflow cleans the glass pane to avoid soot build-up. If you over-restrict the secondary airflow, soot can build up on the glass pane. The secondary airflow determines the heat output from your wood stove.

Settings for normal load: 60 - 90%

Baffle plates

The baffle plates are located in the upper part of the combustion chamber. The plates hold back smoke, making sure it stays inside the combustion chamber for a longer time before escaping through the chimney. This reduces the smoke gas temperature as the gases have more time to dissipate heat to the wood-burning stove. The baffle plates must be removed for sweeping; see „Maintaining your wood-burning stove“. Note that the baffle plates are made of porous, ceramic material, and can break. Exercise care when working. The baffle plates are subject to wear and tear, and are not covered by the warranty.

Ash container

Open the door of the stove to reach the ash container under the combustion chamber.
The ash container must always be closed while stoking.
The ash container must not be overfilled and must therefore be emptied at regular intervals.

Handle for riddling grate

The stove is equipped with a riddling grate that empties ash from the combustion chamber down into the ash container when activated.
The riddling grate must remain half open while stoking.

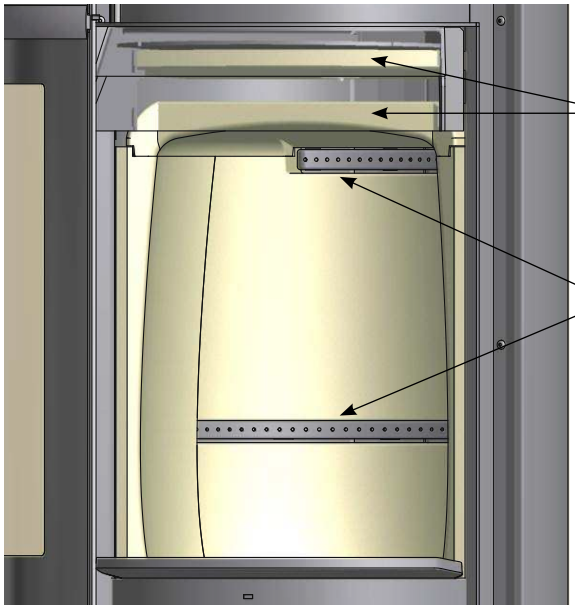

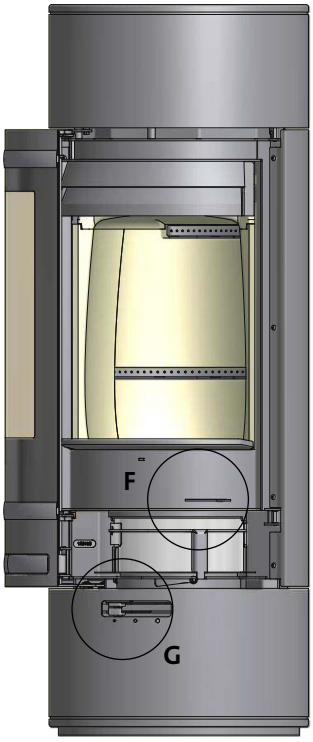

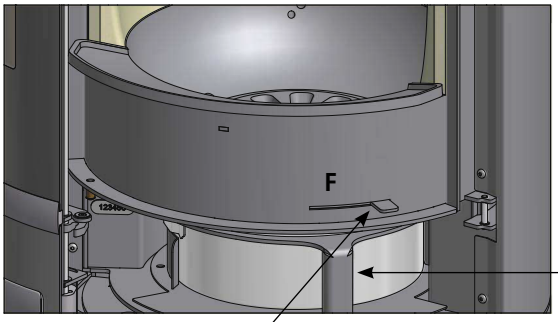

Adjustment of air supply,
primary and secondary damper

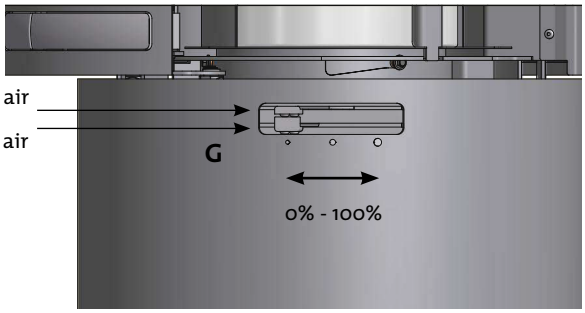

Environmentally-Friendly Heating

Avoid restricting your wood-burning stove to an extent where no flames are visible during the degasifying period, as this leads to particularly inefficient heating. The gases released by the wood do not burn due to the low temperature in the combustion chamber. Part of the gas condenses in the wood-burning stove and flue system as soot, and this could lead to your chimney catching fire. The smoke that exits the chimney is bad for the environment and has an unpleasant smell.

Lighting

We recommend the use of fire starters, or similar products, which are available from your Scan dealer. Using fire starters helps to light the wood quicker, and keeps the burning process clean.
Never use liquid lighting fuels!

As the stove's combustion chamber is very large, it is important that the used wood is dry in order to generate enough heat for a clean combustion.

The combustion chamber lining will become black when the fire is lit. It will burn clear again when the stove is stoked up.

"Top down" lighting

4 pieces of wood approx. 25 cm long with a weight of approx. 0.6 – 0.8 kg per piece (images 1 – 2).
20 - 30 thin sticks of about 20 cm with a total weight of approx. 400 g (images 3 - 5).
4 fire starters (image 6).

Place logs, sticks and fire starters in the combustion chamber as shown on images 1 - 6.

The primary and secondary air valves must be completely open during the entire lighting phase.

"Top down" lighting gives a more environmentally friendly start to your fire and helps to keep the glass area as clean as possible.

1.

2.

3.

4.

5.

Fire starters

6.

Continuous firing

It is important to reach as high a temperature as possible in the combustion chamber. This makes the most efficient use of the wood stove and fuel, and ensures a clean burning process. At the same time, this avoids soot build-up on the combustion chamber walls and glass. While the stove is lit, you should not see any smoke, but just air movement that indicates the burning process.
After completing the lighting phase, you should have a good layer of embers in the wood stove; you can then start stoking up the stove. Lay 2-3 pieces of wood, of about 0.6 - 0.8 kg weight with a length of about 25 cm onto the fire.
Note! The wood must catch fire quickly; this is why we recommend setting the primary airflow to full power. Running the stove at too low a temperature and with too little primary air can lead to deflagration of the gases, and thus cause damage to the stove.
When stoking up with wood, always open the glass door carefully to avoid smoke escaping. Never stoke up with wood while the fire is still burning nicely.

Using your stove in the spring or autumn

In the transition period (spring/autumn), where there is less need for heating, we recommend to make a single „top down“ lighting, perhaps with one stoke up to ensure that the combustion chamber lining burns clean again.

Why you need a chimney

The chimney is the wood-burning stove‘s motor; it‘s performance decides how well your stove will work. The draft in the chimney creates a vacuum in the wood-burning stove. The vacuum draws the smoke out of the stove, and takes in air through the combustion air baffle to fuel the burning process. Combustion air is also used for the airwash system that keeps the window clear of soot.
The draft in the chimney is caused by the difference in temperatures inside and outside the chimney. The higher the temperature difference is, the better the draft in the chimney will be. It is thus important for the chimney to reach operating temperature before you adjust the damper to restrict combustion in the stove (a brickwork chimney will take longer to reach operating temperature than a steel chimney). It is very important to reach operating temperature as quickly as possible on days on which the draft in the chimney is poor due to unfavorable wind and weather conditions. Make sure the fuel ignites as quickly as possible (with visible flames). Chop the wood into particularly small pieces; use an extra fire lighter etc.
After longer periods of disuse, check the chimney flue for blockage.
You can connect several units to the same chimney. But make sure check with your chimney sweep to observe local regulations.
No matter how good your chimney is, it will not perform well if you do not use it correctly. On the other hand a poor chimney, may give you acceptable results if you use it correctly.

Using your stove in various weather conditions

Wind blowing on the chimney can have a great effect on how your stove reacts in various wind conditions; you may need to adjust the airflow to achieve good burning results. Fitting a damper in the flue pipe may also help as it will give you the ability to regulate the draught in changing wind conditions.
Fog can also have a great influence on how well a chimney draws; you may again need to adjust the airflow settings to achieve good burning results.

General Notes

Please note! Parts of the wood-burning stove, especially the outer surfaces, become hot during use. Please exercise due care.

Never empty ashes into a flammable container. Ashes can contain glowing embers long after you finish using your wood stove.

While the stove is not in use you can close the valves to avoid draught through the stove.

After longer breaks you should check the smoke outlet paths for blockages before lighting.

Chimney fires

In case of a chimney fire, keep the stove door, the ash container, and the valves on the stove closed. In case of emergency, call the fire service.

It is recommended that you get a chimney sweep to check the chimney before using the stove again.

Handling fuels

Selecting Wood/Fuel

You can use any type of wood as firewood, however, harder types, such as beech, ash, are generally better for heating as they burn more evenly and create less ash. Other wood types like maple, birch and spruce are excellent alternatives.

Handling

Firewood is best if you fell the tree, and saw and split the wood, before May 1st. Remember to cut the logs to match the size of your wood-burning stove‘s combustion chamber. We recommend a diameter of 6-10 cm. The length should be about 6 cm shorter than that of the combustion chamber to leave enough space for air to circulate. Firewood with a greater diameter needs splitting. Split wood dries faster.

Storing

You need to store the sawn and split firewood in a dry place for 1-2 years before burning. Wood dries faster if you stack it in an airy place. Before use, store the firewood for a few days at room temperature. Note that wood absorbs moisture during the autumn and winter seasons.

Moisture

To avoid environmental issues, and for optimum burning, wood has to be perfectly dry to be suitable for use as firewood. The max. residual moisture in the wood should not exceed 20%. A moisture content of 15-18% yields best results. As an easy way of checking if wood is dry, just knock two pieces of wood together. If the wood is moist, the sound will be dull.
If you use damp wood, most of the heat it produces will be used to evaporate the water. The temperature in the wood stove does not rise, and the room is not sufficiently heated. Of course, this is not economical, and it will cause soot build up on the glass pane, in the stove, and in the chimney. Burning moist wood also causes pollution.

Understanding units for measuring wood

Various units of measurement are used for wood. Before you buy wood, it makes sense to familiarise yourself with the terms. There are various brochures, in public libraries for example, that cover this topic.

Use of the following as fuel is illegal

Painted, pressure impregnated, or glued wood, driftwood from the sea. Never burn chipboard, plastics, or chemically treated paper. These materials are dangerous to humans, to the environment, your wood stove, and your chimney. To keep a long story short – make sure you burn only quality firewood.

Firewood fuel value

The fuel value is different for different types of wood. In other words, you need to use more wood of certain types to achieve the same heating performance. This Instruction Manual assumes that you will be using beech, which has a very high fuel value, and is also a wood that is easy to procure. If you use oak or beech wood fuel, note that these wood types have a greater fuel value than, say, birch. Make sure you use less fuel to avoid damage to the wood-burning stove.

Wood types	Kg Dry wood/m3	Compared to beech
Hornbeam	640	110%
Beech/Oak	580	100%
Ash	570	98%
Maple	540	93%
Birch	510	88%
Pine	480	83%
Fir	390	67%
Poplar	380	65%

Maintaining your wood-burning stove

Apart from regular chimney sweeping, your wood-burning stove does not require any regular maintenance. However, we recommend servicing at least once every two years

Coated surfaces

Clean your wood-burning stove by dusting with a dry, lint-free cloth. If the topcoat is damaged, you can purchase a repair spray from your authorised Scan dealer. As slight differences in colour are possible, spray a larger area to achieve a natural transition for best results. For best results, apply repair spray when the wood-burning stove is hand-hot.

Cleaning the glass

Our wood-burning stoves are designed to prevent serious soot build up on the glass. The best way to achieve this is to make sure you have a sufficient combustion air supply. It is also important to use dry wood, and have a correctly dimensioned chimney.

Even if you follow all of our instructions, a slight film of soot can build up on the glass. You can easily remove this build up by cleaning with a dry cloth and glass cleaner. Please note that the glass cleaner is not to get into contact with the gaskets, as this can discolour the glass permanently. Please be careful when cleaning the glass with glass cleaner.

The detergent must not come into contact with the painted surfaces as these can be damaged.

Combustion chamber lining

Slight cracks can appear in the combustion chamber lining due to moisture, or to the heating/cooling process. These cracks have no influence on the heating performance or lifetime of your stove. However, if the lining starts to crumble, you must replace it. The combustion chamber lining is not covered by the warranty.

Seals

All wood-burning stoves have seals made of ceramic material fitted to the stove, the doors, and/or the glass. These seals are subject to wear and tear, and must be replaced when necessary.

Chimney sweeping and cleaning your wood-burning stove

Follow national and local chimney sweeping regulations. We recommend having the wood-burning stove cleaned regularly by the chimney sweep.
Before starting to clean your wood-burning stove, and sweep the flue pipe, we recommend first removing the baffle plates.

Use only original replacement parts for maintenance and repairs of your stove.

Note! Make sure the wood-burning stove is cold before starting maintenance or repair work.

Removing the baffle plates

See page 24, “Service”.

Checking the stove

Scan A/S recommends that you check your stove thoroughly after sweeping/cleaning. Check all visible surfaces for cracks. Check that all joints are tight and that the seals sit correctly. Worn or deformed seals should be replaced.

Servicing

We recommend that the stove should have a comprehensive servicing at least once every two years. Servicing should include the following:

- Lubricate hinges using copper grease
- Check gaskets. Replace any that are broken or weak.
- Check combustion chamber door and riddling grate
- Check combustion chamber lining and baffle plates.

  The stove must be serviced by a qualified fitter. Use only orignal spare parts.

Servicing

Removing the baffle plates

Be very careful when removing the baffle plates from the wood-burning stove.

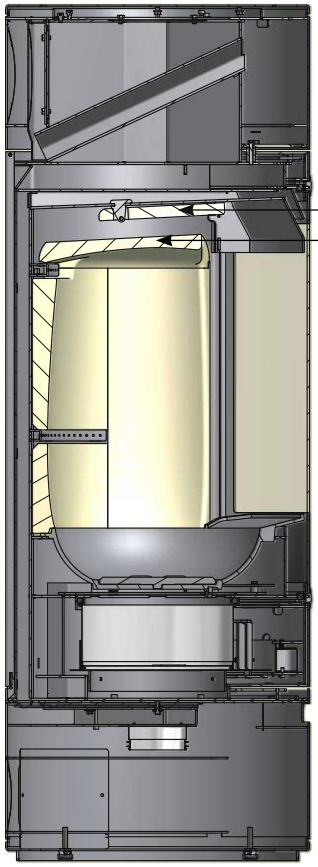

Lift the lower baffle pate.

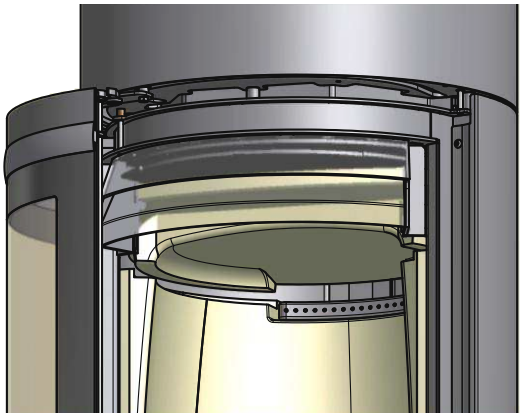

Turn the baffle plate 90°, and edge it out through the combustion chamber.

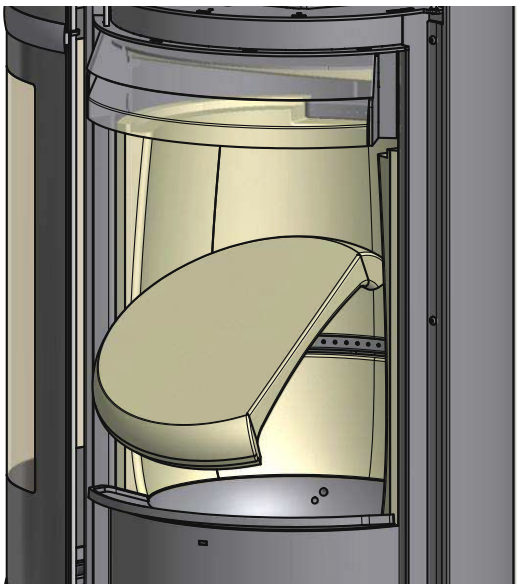

Lift up the upper smoke deflector plate and remove the pin. Edge the baffle plate through the combustion chamber and out.

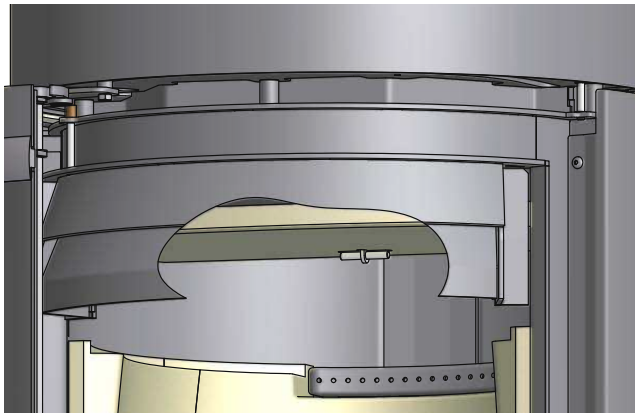

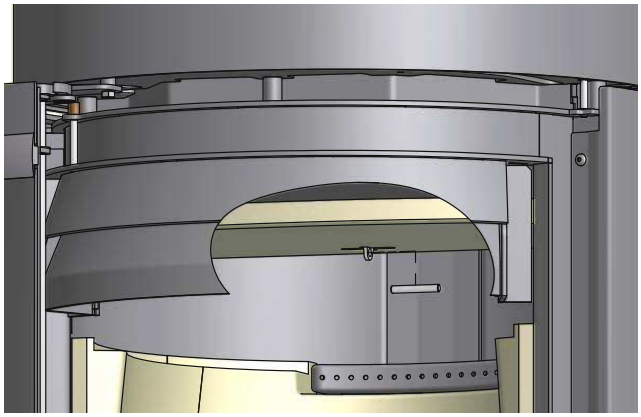

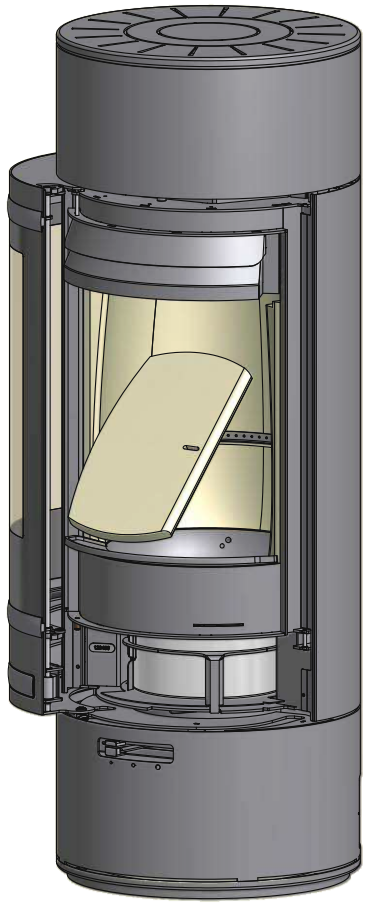

The baffle plate holder can fall out when the baffle plate is taken out of the wood-burning stove. See in the illustrations below how to insert it.

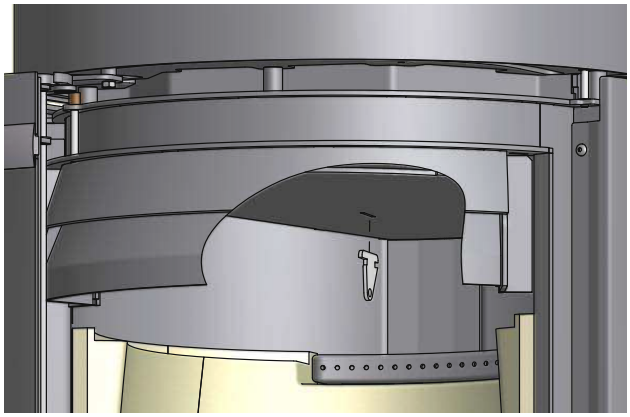

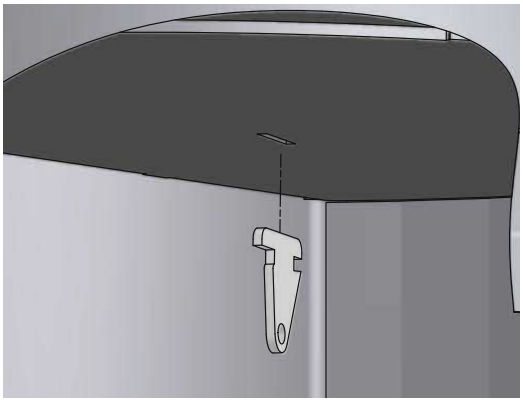

Removing the combustion chamber lining

Carefully lift the sides and rear plates of the combustion chamber lining out of the stove.

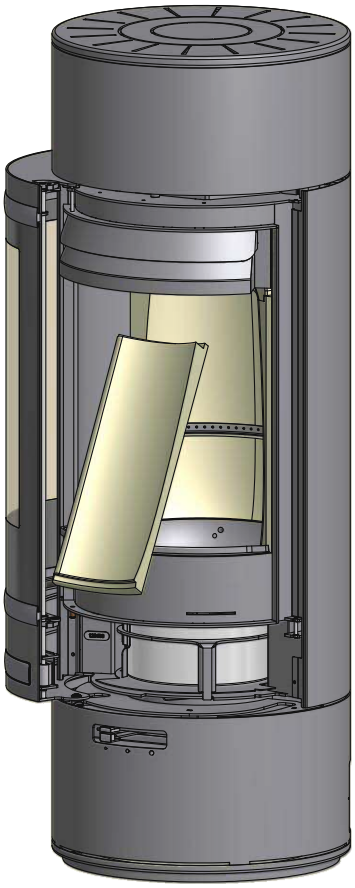

In order to remove the lower back plate of the combustion chamber, lift the cast iron bottom upwards and forwards. This will release the back plate, which can then be removed from the combustion chamber.

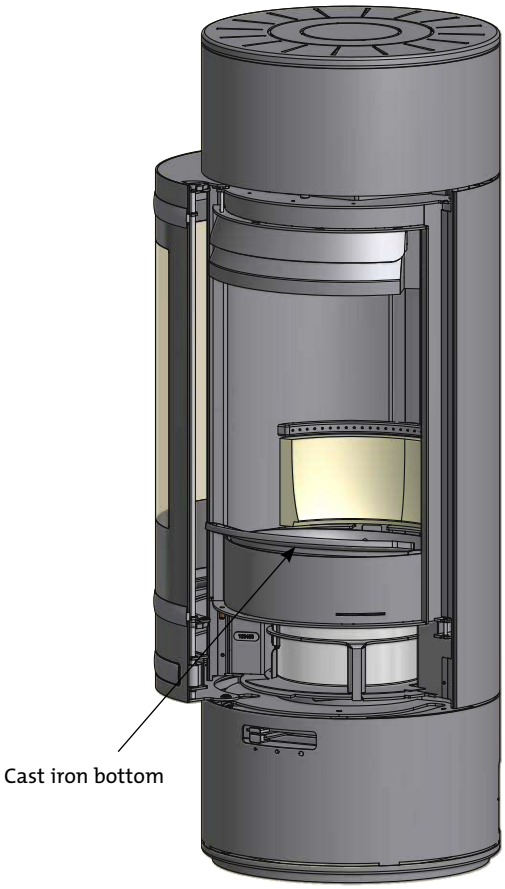

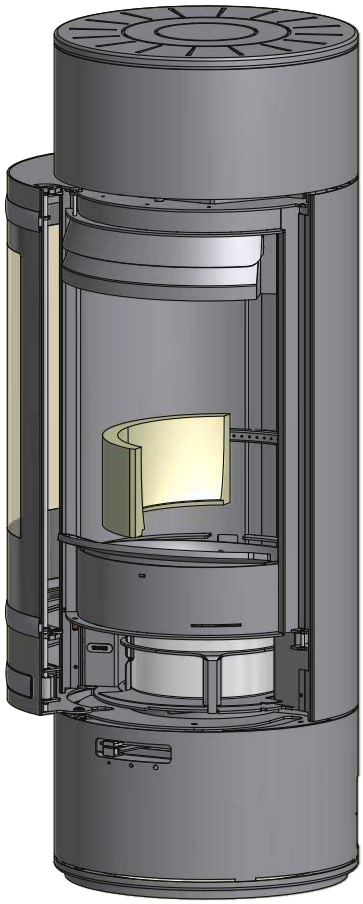

Smoke escaping

- Damp wood
- Chimney not drawing properly
- Chimney is not properly dimensioned for the stove
- Check if the smoke gas pipe/chimney are blocked
- Is the chimney the right height for its surroundings?
- At rear outlet, check that the flue pipe does not obstruct the chimney draught
- Vacuum in room
- The door is opened before the embers have burned down sufficiently

Wood burning too quickly

- The air valves are set incorrectly
- The baffle plates is incorrectly mounted or missing
- Inferior firewood (waste wood, pallets etc.)
- Chimney too large

Soot build-up on glass

- Incorrect secondary airflow setting
- Excessive primary air
- Damp wood
- Wood pieces too large on lighting
- Inferior firewood (waste wood, pallets etc.)
- Chimney not drawing sufficiently
- Vacuum in room

Excessive soot build-up in chimney

- Poor burning (more air required)
- Damp wood

The surface of the stove is turning grey

- Overheating (see instructions for heating)

Poor heating performance of stove

- Damp wood
- Not enough wood
- Inferior wood quality with low fuel value
- Baffle plates are not fitted correctly

Odour coming from stove

- The lacquer on the stove hardens when you use the stove for the first time; this can cause an odour. Open a window or a door for ventilation, and make sure the stove is heated up sufficiently to avoid odours later.
- When heating up and cooling down, the stove may make some clicking noises. These are due to the huge temperature differences to which the material is exposed and do not indicate any product defects.

Warranty

All wood-fired Scan products are made of high-quality materials and subject to strict quality controls before leaving the factory. We give a warranty of 5 years on manufacturing errors or defects.

You must quote your stove's product registration number when you contact us or your authorised Scan dealer with a warranty claim.

The warranty covers all parts which in the opinion of Scan A/S require repair or replacement due to manufacturing or construction error

The warranty applies to the original purchaser of the product only, and is not transferable (except on prior sale).

The warranty covers only damage caused by manufacturing or construction errors.

The following parts are not covered by the warranty

- Wear and tear parts, such as the combustion chamber liners, baffle plates, riddling grate, glass, tiles, and seals (except for defects which were present on delivery).
- Defects caused by external chemical and physical influences during transportation, storage and assembly, or at a later time.
- Soot build-up caused by poor chimney draught, damp wood, or improper use.
- Costs of additional heating in connection with a repair.
- Transport costs.
- Costs for setting up, removing the wood stove.

This warranty is void

- In case of incorrect installation (the installer is responsible for observing and complying with legal requirements and local bylaws, along with this Assembly- and Instructionsmanual for the wood-burning stove and accessories).
- In case of improper use, and/or use of prohibited fuels, non-original spares (see this Assembly- and instructions manual).
- If the product registration number of the stove has been removed or damaged.
- In case of repairs that do not comply with our instructions or instructions by an authorised Scan dealer.
- In case of any manipulation of the original state of this Scan product or its accessories.
- This warranty is only valid in the country to which this Scan product was originally supplied.

Always use original replacement parts, or parts recommended by the manufacturer.