Scan 65-series

Congratulations on your new Scan wood-burning stove

You have purchased a product by one of Europe's leading manufacturers of wood-burning stoves, and we are sure that you will have years of pleasure with your purchase. To make the best possible use of your stove, it is important that you follow our advice and instructions.

Read through this Assembly and Instruction Manual carefully before you start to assemble your stove.

Product registration number

Please indicate the product registration number at any enquiry

Table of contents

Technical data 3

Installation
Safety
Technical data and dimensions
Dimension sketches
Type plate
Product registration number
Additional accessories
Loose parts

Assembly 9

Removal of packaging
Positioning your wood-burning stove
Distance to furniture
Distance to flammable materials, shown with insulated flue pipe
Distance to flammable materials, shown with un-insulated flue pipe
Distance to firewall
Height adjustment of stove
Load bearing foundation
Floor plates
Existing chimney and pre-fabricated element chimney
Connection between stove and steel chimney
Requirements for chimney
Connection with 90° elbow pipe
Connecting piece / top outlet
Connecting piece / rear outlet
Fitting the natural stones
Fresh air intake
Closed combustion system
Indicator for control of air supply
Open plinth

Accessories 20

Heat-storage stones
Fitting the natural stone top plate

Instruction for use 21

CB technique
Primary air
Secondary air
Baffle plates
Ash drawer
Handle for riddling grate

Instructions for heating 22

Lighting
Handling fuel

The Clean Air Act 1993 / Maintenance 24

Troubleshooting 26

Installation

The house owner is responsible for ensuring that installation and assembly are in accordance with national and local building regulations as well as the information provided in this Assembly and Instruction Manual.

When you install any kind of fireplace or stove, you must inform the local building and housing authorities. In addition you are obliged to have the installation inspected and approved by a local chimney sweep prior to commissioning.

To ensure best-possible functionality and safety for your installation, we advise you to call a professional fitter. Your Scan Dealer will be able to recommend a qualified fitter in your area. For information on Scan Dealers, please go to www.scan.dk.

Safety

Any changes made to the product by the dealer, fitter or user could result in the product and safety functions not functioning as intended. The same applies to the fitting of accessories or extra equipment not supplied by Scan A/S. This could also be the case if parts that are necessary for the operation and safety of the stove are dismantled or removed.

The Scan 65-series consists of:

Scan 65-1

Steel sides

Scan 65-2

Steel sides
and side windows

Scan 65-1 LB
Low base,
steel sides

Scan 65-2 LB
Low base, steel sides
and side windows

Scan 65-3

Natural stones

Scan 65-4

Natural stones
and side windows

Scan 65-5

Steel sides,
baking oven

Scan 65-6

Steel sides,
baking oven and
side windows

Scan 65-7

High Top,
natural stones

Scan 65-8

High Top,
natural stones and
side windows

Scan 65-9

High Top,
steel sides

Scan 65-10

High Top, steel sides
and side windows

Technical data and dimensions

Materials	Steel plate, cast iron, galvanised sheet, vermicolite
Surface treatment	senotherm
Max. wood length	30 cm
Weight 65-1 /2	ca. 123 kg
Weight 65-3	ca. 180 kg
Weight 65-4	ca. 168 kg
Weight 65-5/6	ca. 162 kg
Weight 65-7	ca. 258 kg
Weight 65-8	ca. 246 kg
Weight 65-9/10	ca. 162 kg
Connecting piece internal diameter	144 mm
Connecting piece external diameter	148 mm
Approval type	Intermittent fuelling*

*Intermittent operation in this context means normal use of a wood-burning stove. In other words, you should let the fire die down until only the embers are left before refueling.

This stove is produced in accordance with type approval for the product, which also covers the product's Assembly and Instruction Manual.

The Declaration of Performance (DoP) is available from www.scan.dk

Test in compliance with EN 13240

	Technical data	Unit
CO Emission at 13% O2		%
CO Emission at 13% O2		mg/Nm3
Dust @ 13% O2		mg/Nm3
Nox @ 13% O2		mg/Nm3
Efficiency		%
Energy efficiency index		
Energy efficiency class		
Nominel output		kW
Chimney temperature EN 13240		°C
Temperature in connecting piece		°C
Amount of smoke		g/sek
Sub-pressure EN 13240		Pa
Recommended sub-pressure in connecting piece		Pa
Required combustion air supply		Nm3/h
Fuel		Wood
Fuel consumption		kg/h
Amount of fuel		kg

	Technical data	Unit
CO Emission at 13% O2		%
CO Emission at 13% O2		mg/Nm3
Dust @ 13% O2		mg/Nm3
Nox @ 13% O2		mg/Nm3
Efficiency		%
Energy efficiency index		
Energy efficiency class		
Nominel output		kW
Chimney temperature EN 13240		°C
Temperature in connecting piece		°C
Amount of smoke		g/sek
Sub-pressure EN 13240		Pa
Recommended sub-pressure in connecting piece		Pa
Required combustion air supply		Nm3/h
Fuel		Wood
Fuel consumption		kg/h
Amount of fuel		kg

Dimension sketch

65-1, 65-2, 65-3 & 65-4

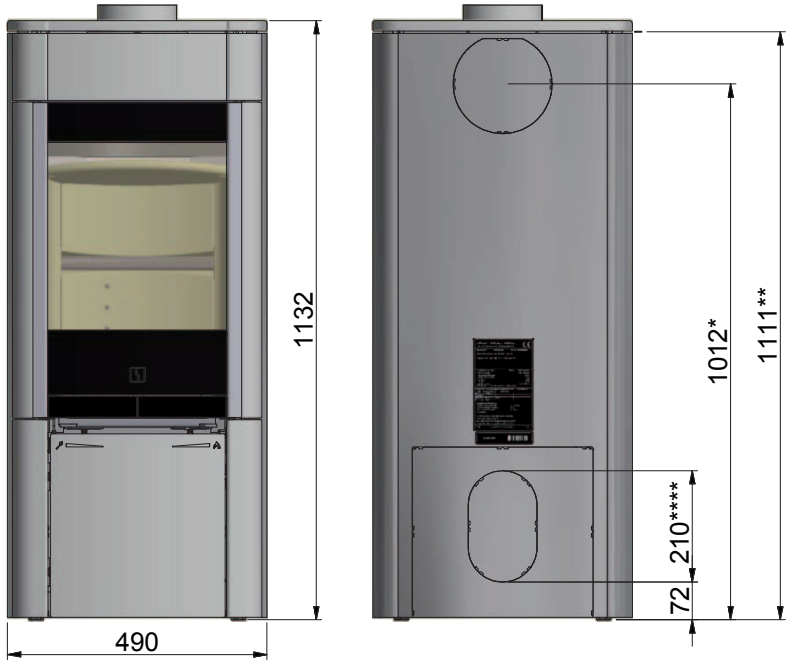

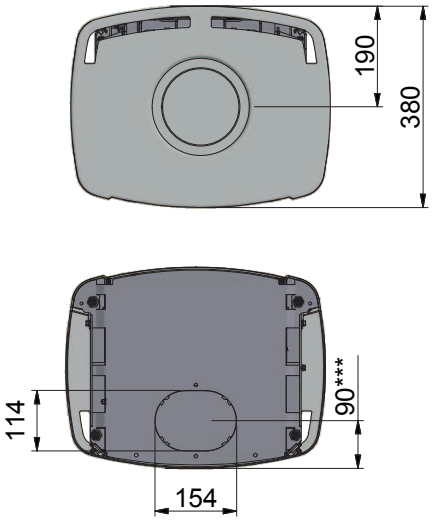

* Centre rear outlet

** Height to the beginning of the connecting piece at top outlet

*** Fresh air intake bottom

**** Fresh air intake at the back of the stove

65-5, 65-6, 65-7, 65-8, 65-9 & 65-10

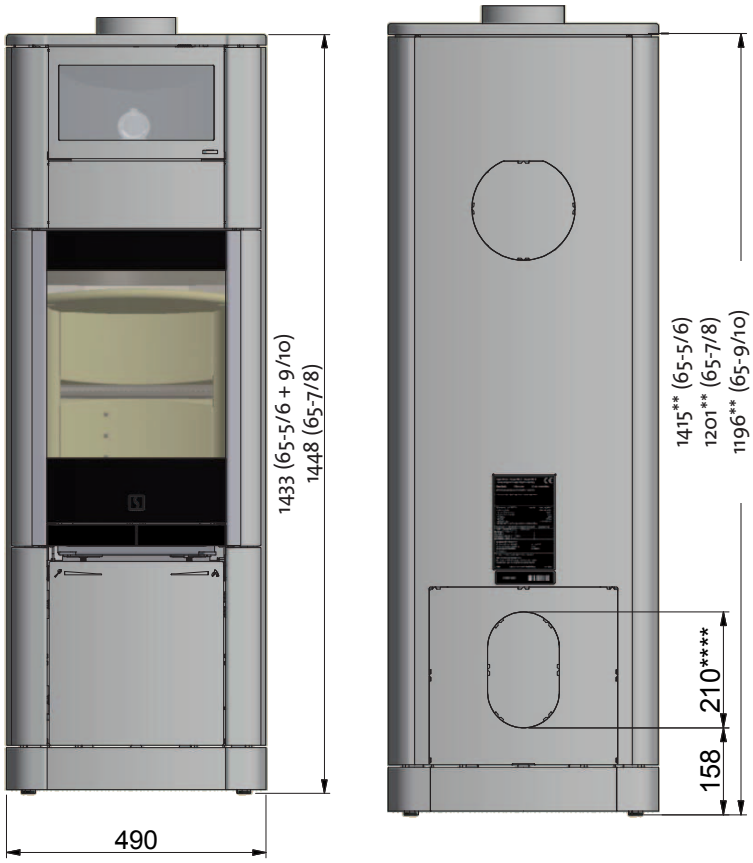

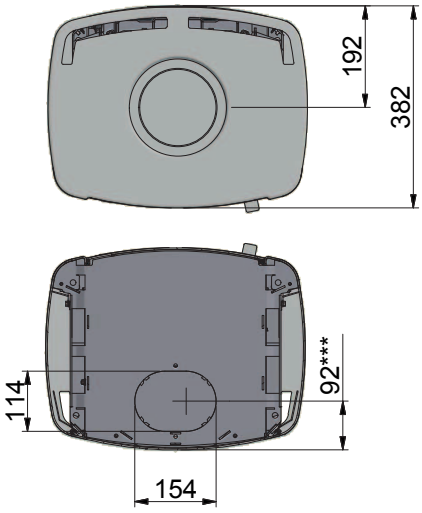

65-9/10

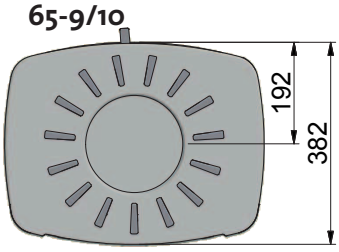

Dimension sketch

65-1 LB & 65-2 LB

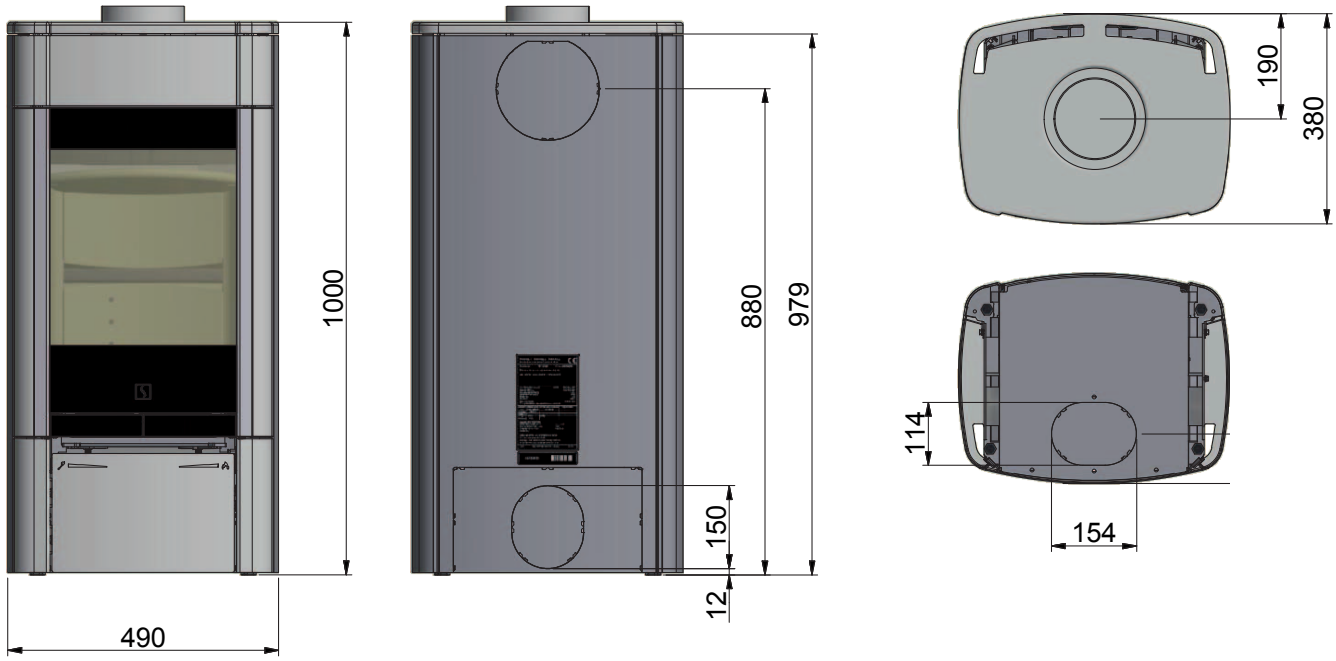

Type plate

All Scan wood-burning stoves are fitted with a type plate that specifies the approval standards and the distance to flammable materials.

The type plate is located at the rear of the stove.

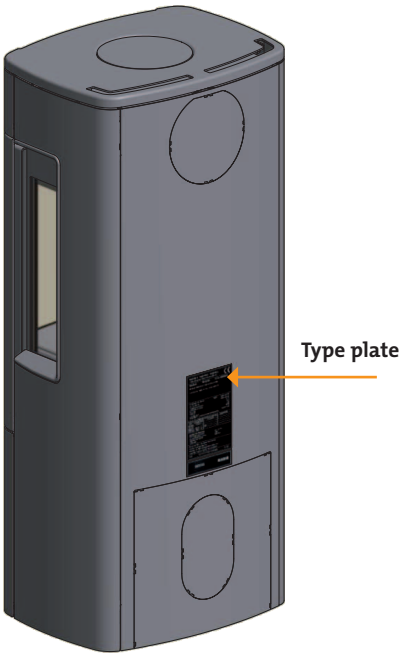

65-1, 65-3, 65-5,65-7 & 65-9

(Without side windows)

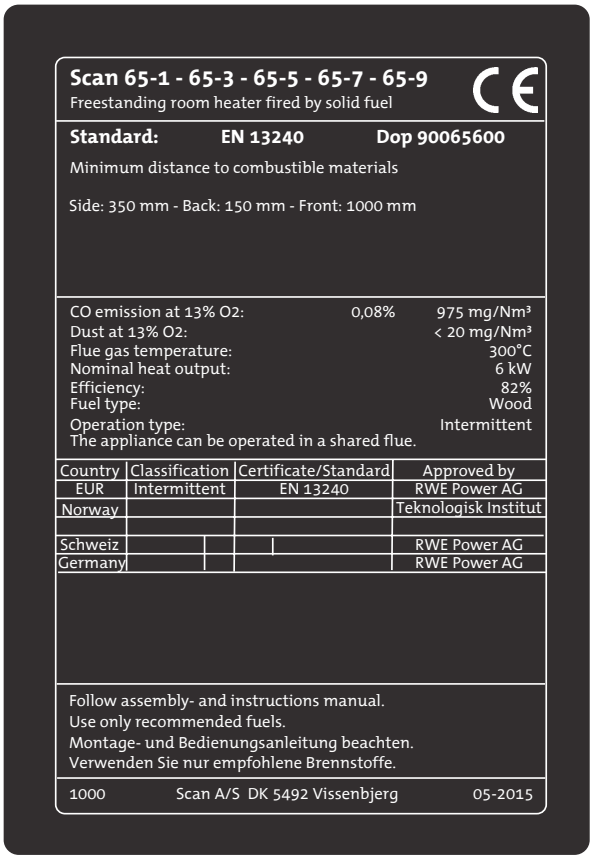

Scan 65-1 - 65-3 - 65-5 - 65-7 - 65-9
Freestanding room heater fired by solid fuel

Standard: **EN 13240** **Dop 90065600**

Minimum distance to combustible materials

Side: 350 mm - Back: 150 mm - Front: 1000 mm

CO emission at 13% O2:	0,08%	975 mg/Nm³
Dust at 13% O2:		< 20 mg/Nm³
Flue gas temperature:		300°C
Nominal heat output:		6 kW
Efficiency:		82%
Fuel type:		Wood
Operation type:		Intermittent

The appliance can be operated in a shared flue.

Country	Classification	Certificate/Standard	Approved by
EUR	Intermittent	EN 13240	RWE Power AG
Norway			Teknologisk Institut
Schweiz			RWE Power AG
Germany			RWE Power AG

Follow assembly- and instructions manual.
Use only recommended fuels.
Montage- und Bedienungsanleitung beachten.
Verwenden Sie nur empfohlene Brennstoffe.

1000 Scan A/S DK 5492 Vissenbjerg 05-2015

Product registration number

All Scan wood-burning stoves are provided with a product registration number. You will always need to quote this number when contacting your dealer or Scan A/S.

The product registration number is located at the rear of the stove.

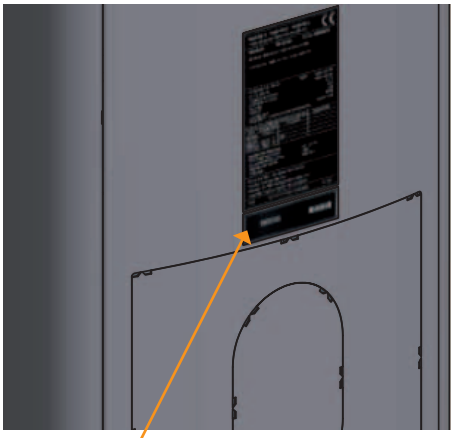

Product registration number

65-2, 65-4, 65-6, 65-8 & 65-10

(With side windows)

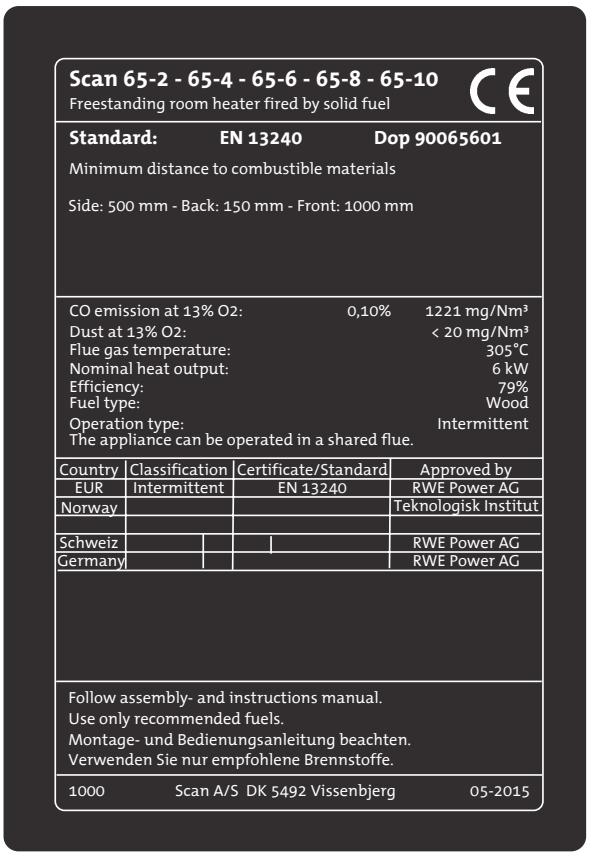

Scan 65-2 - 65-4 - 65-6 - 65-8 - 65-10
Freestanding room heater fired by solid fuel

Standard: **EN 13240** **Dop 90065601**

Minimum distance to combustible materials

Side: 500 mm - Back: 150 mm - Front: 1000 mm

CO emission at 13% O2:	0,10%	1221 mg/Nm³
Dust at 13% O2:		< 20 mg/Nm³
Flue gas temperature:		305°C
Nominal heat output:		6 kW
Efficiency:		79%
Fuel type:		Wood
Operation type:		Intermittent

The appliance can be operated in a shared flue.

Country	Classification	Certificate/Standard	Approved by
EUR	Intermittent	EN 13240	RWE Power AG
Norway			Teknologisk Institut
Schweiz			RWE Power AG
Germany			RWE Power AG

Follow assembly- and instructions manual.
Use only recommended fuels.
Montage- und Bedienungsanleitung beachten.
Verwenden Sie nur empfohlene Brennstoffe.

1000 Scan A/S DK 5492 Vissenbjerg 05-2015

Additional accessories

- Small shaped floor plate in glass or steel
- Large shaped floor plate in glass or steel
- Natural stones top plate for stove with rear outlet
- Natural stones top plate for stove with top outlet
- Heat accumulating stones (Scan 65-7, 65-8, 65-9 & 65-10)

Loose parts

The loose parts are located in the stove's ash drawer.

Scan 65, all types:

- Glove
- Seal
- 4 pcs. screws for fastening the connecting piece
- 1 pcs. indicator for control of air supply
- 1 pcs. screw M5x6, must be placed for United Kingdom.

Scan 65-3 and 65-4:

- 4,5 m gasket

Scan 65-7 and 65-8:

- 7 m gasket

Disposal of packaging

Your Scan stove may come supplied with the following packaging:

WOOD PACKAGING:
The wood packaging can be reused and after final use can be incinerated as a CO_2 neutral product or sent for recycling.

POLYSTYRENE TOP:
Send for recycling or waste disposal.

FOAM:
Send for recycling or waste disposal.

PLASTIC BAGS:
Send for recycling or waste disposal.

STRETCH FILM/PLASTIC FILM:
Send for recycling or waste disposal.

Removal of packaging

Check that the stove is not damaged before starting to install it.

The stove comes attached to a wooden pallet on delivery.

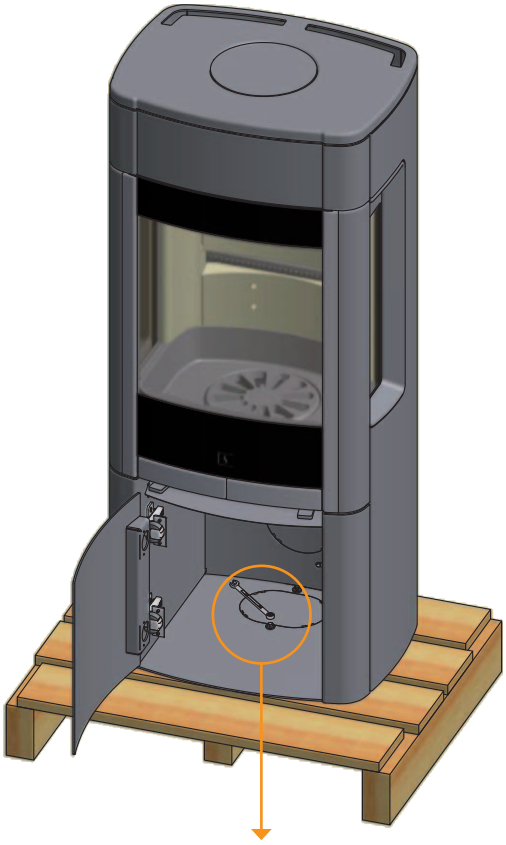

Remove the screws securing the stove to the pallet.

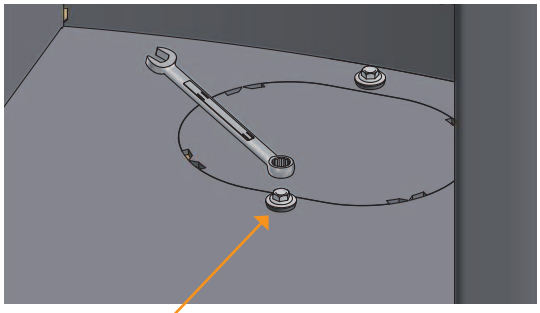

Screws to be removed

Fit the plastic plugs from the service box into the transport protection holes.

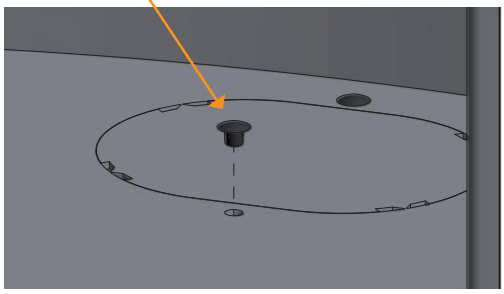

Remove the protection between the baffle plates, before taking the stove into use!

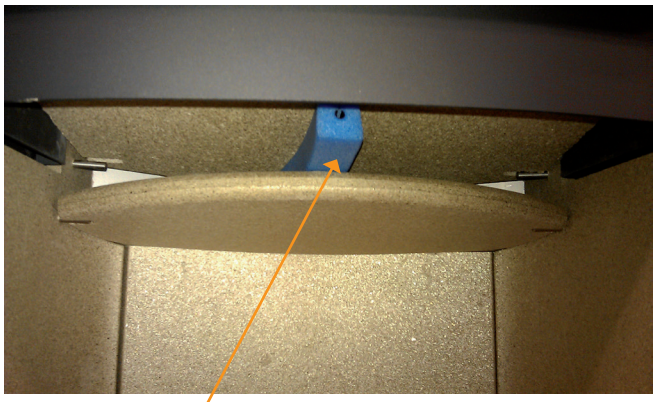

Protection for baffle plates

Put back the upper plate on the pins, as the protection pushes the plate upwards.

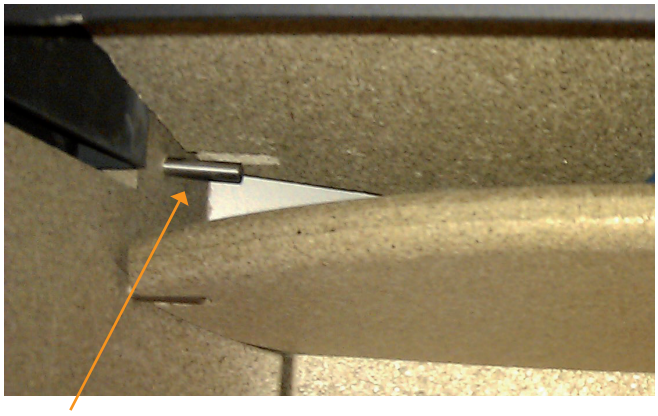

Pin for baffle plate

Positioning your wood-burning stove

The stove must be set up so that the stove itself, the flue pipe, and the chimney can all be cleaned.

Distance to furniture: 1000 mm

You should however assess whether furniture or other items might become excessively dry due to being too close to the stove.

National and local regulations governing safety distances for wood-burning stoves must be complied with.

If the stove is to be connected to a steel chimney, the chimney requirements in terms of safety distances must be met.

Distance to flammable materials

These distances apply for an uninsulated flue pipe/insulated flue pipe, all the way down to the stove, having a minimum of 30 mm insulation.

Distance to flammable materials, shown with insulated flue pipe

65-1, 65-3, 65-5,65-7 & 65-9
(without side windows)

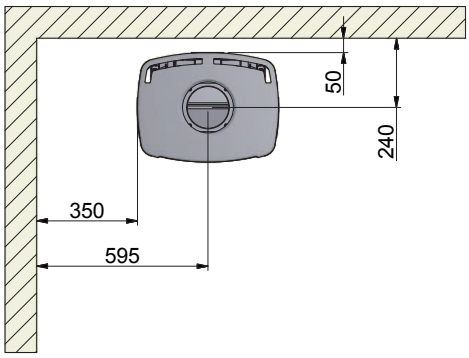

65-2, 65-4, 65-6, 65-8 & 65-10
(with side windows)

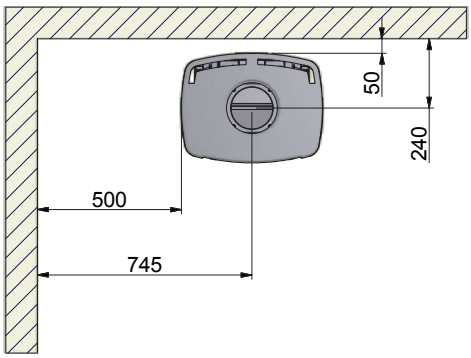

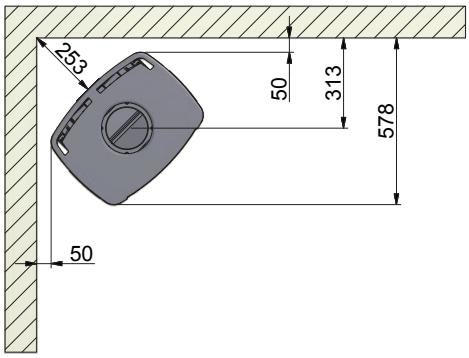

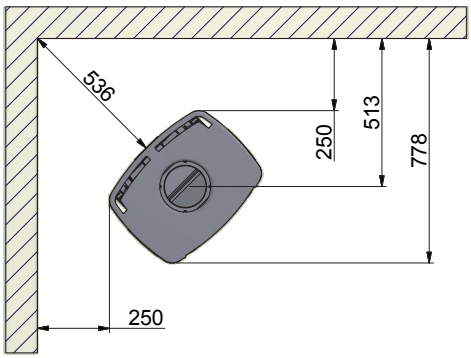

Distance to flammable materials, shown with un-insulated flue pipe

65-1, 65-3, 65-5,65-7 & 65-9
(without side windows)

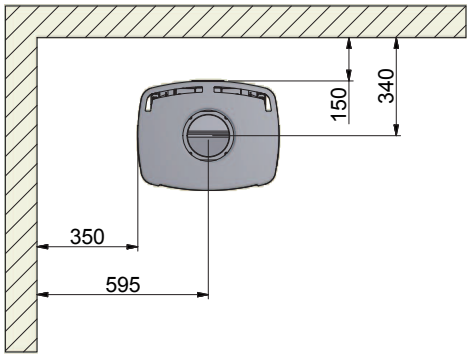

65-2, 65-4, 65-6, 65-8 & 65-10
(with side windows)

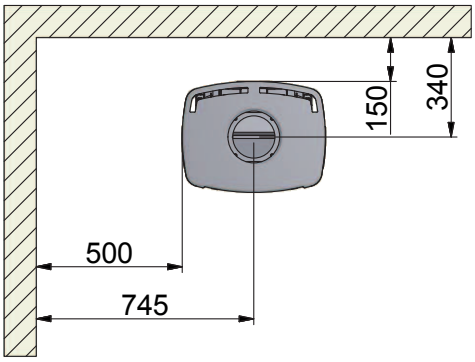

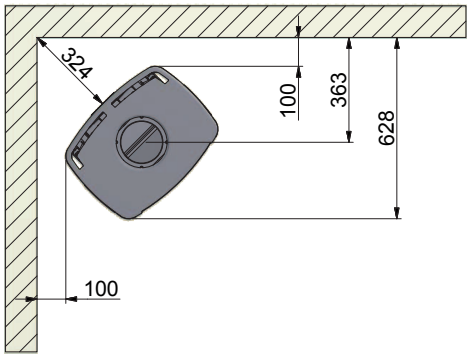

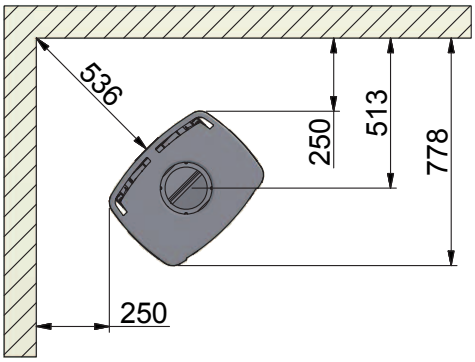

Distance to firewall

110 mm brick or other material with a corresponding insulation ability.

The distances presuppose the use of an insulated flue pipe with min. 30 insulation all the way to the stove.

65-1, 65-3, 65-5,65-7 & 65-9

(without side windows)

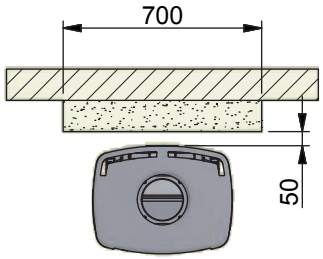

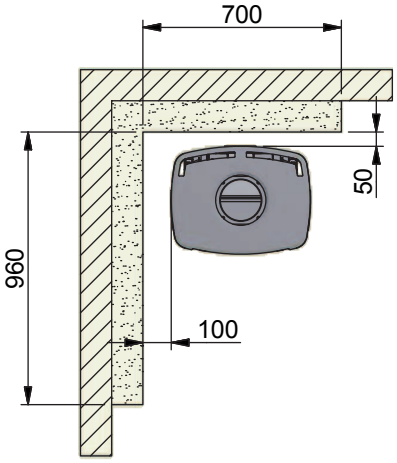

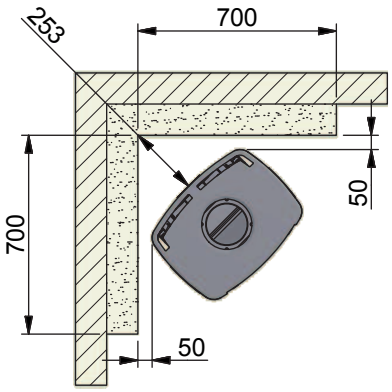

65-2, 65-4, 65-6, 65-8 & 65-10

(with side windows)

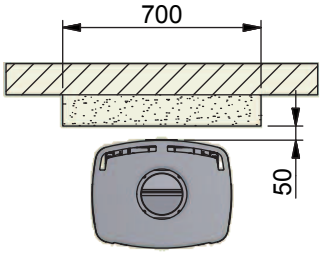

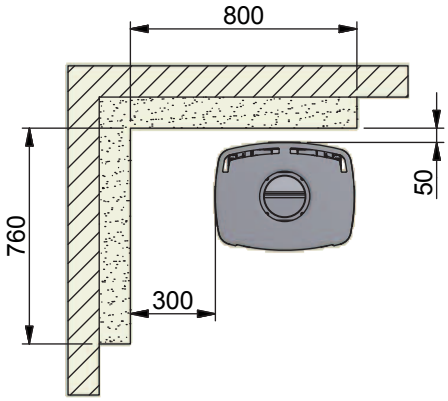

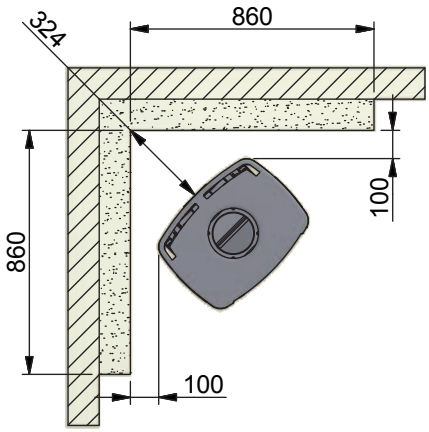

Flammable material

Firewall

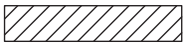

Flammable material

Firewall

Height adjustment of stove

The stove has four adjustment screws under the stove. Use the adjustment screws to get the stove to stand straight and level.

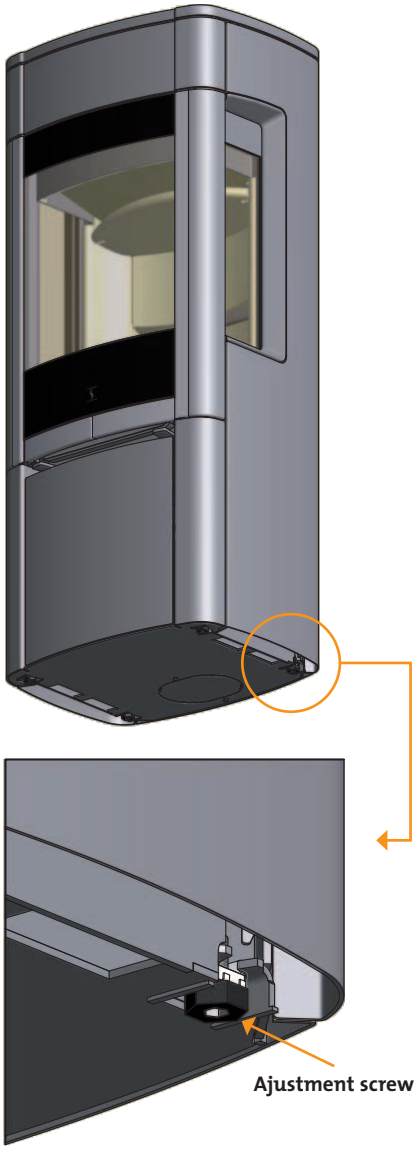

IT IS VERY IMPORTANT THAT THE STOVE IS LEVEL TO ALLOW AN OPTIMAL FUNCTION OF THE DOOR. PLEASE NOTE THAT ONCE MOUNTED THE STOVE CAN NO LONGER BE ADJUSTED!

Load-bearing foundation

All items in our product range come under the category of lightweight fireplaces and stoves and do not normally require any reinforcement of the beam structure. They can be positioned on ordinary beams/floor.

However, you should make sure that the load bearing foundation can bear the weight of the wood-burning stove and that of the chimney.

Floor plate

If you are erecting the stove on a flammable floor, you must comply with the national and local regulations on the size of any non-flammable subsurface required to cover the floor around the stove.

Your local Scan dealer can advise you on regulations concerning protection of flammable materials in the vicinity of your stove.

The floor plate's function is to protect the floor and flammable material against any sparks that may occur.

A floor plate can be made of steel or glass, but the stove can also be erected on clinker concrete, natural stone or similar materials.

This Scan wood-burning stove has an integrated floor plate at the bottom and can thus be erected directly on flammable material without the need for further protection underneath the stove.

Small shaped floor plate in glass or steel

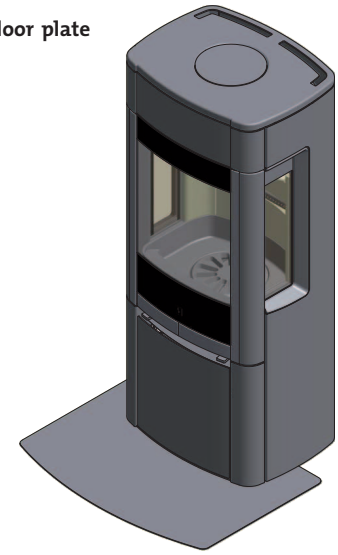

Large shaped floor plate in glass or steel

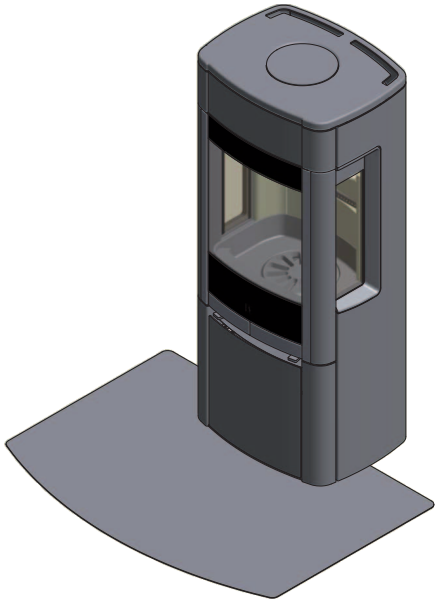

Existing chimney and pre-fabricated element chimney

If you intend to connect your stove to an existing chimney, it makes sense to contact an authorised Scan dealer, or a local chimney sweep, for advice. These experts will also let you know if your chimney needs renovating.

When connecting a pre-fabricated element chimney, follow the manufacturer's connection instructions for the relevant chimney type.

Connection between stove and steel chimney

Your Scan dealer, or local chimney sweep, can advise you on choosing a make and type of steel chimney (we recommend using JØTUL's chimney system). This ensures that the chimney will match your wood-burning stove. As a general rule, the length of the chimney should not be less than 4 metres, measured from the top of the stove.

Specific weather or installation conditions might require a different length.

Choosing the wrong length or diameter of steel chimney could impair functionality.

Always observe the chimney vendor's instructions precisely.

Requirements for chimney

The chimney must be labelled T400 and G for soot testing.

Connecting piece / top outlet

The stove is prepared from the factory for top outlet.

The connecting piece is placed loosely in the top outlet of the stove.

The gasket for the connecting piece and the screws for fastening the connecting piece are in the stove's ash drawer.

Lift the top plate and connecting piece off the stove.

Mount the ceramic gasket on the connecting piece

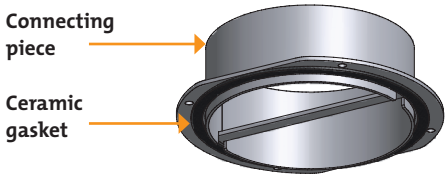

Fasten the connecting piece with screws from the ash drawer and replace the top plate.

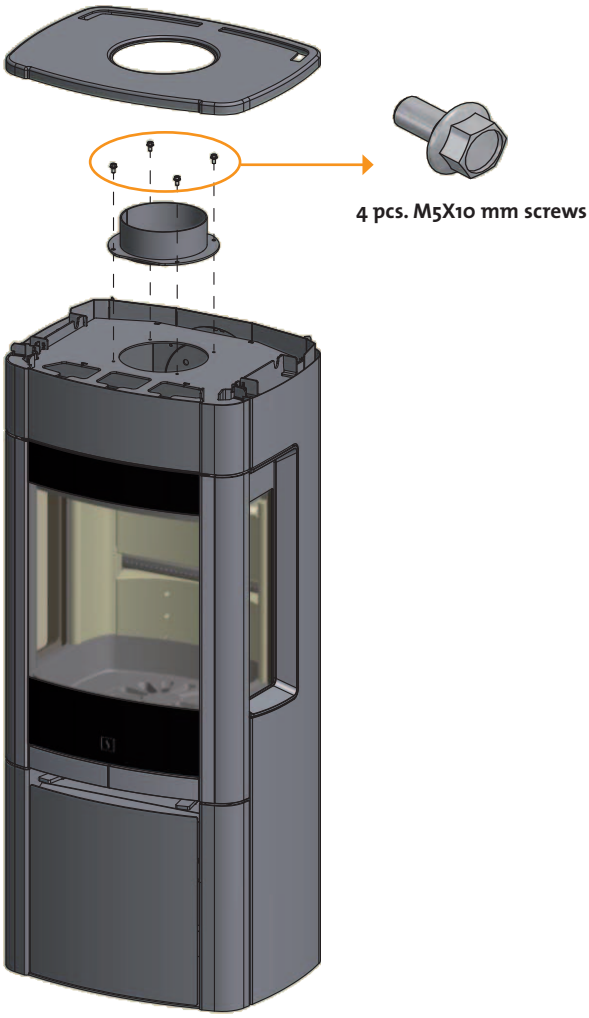

Connection piece / rear outlet

The stove is prepared from the factory for top outlet.

The connecting piece is placed loosely in the top outlet of the stove. The gasket for the connecting piece and the screws for fastening the connecting piece are in the stove's ash drawer.

Lift the top plate and connecting piece off the stove.

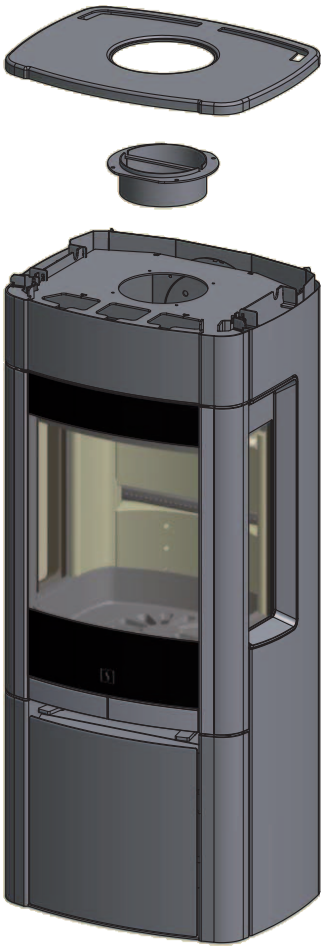

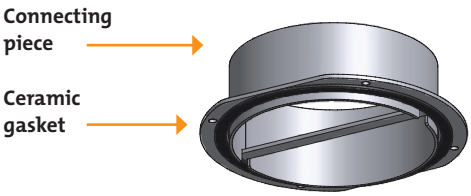

Cut off the cover plate from the rear plate with cutting pliers at the fastening points.

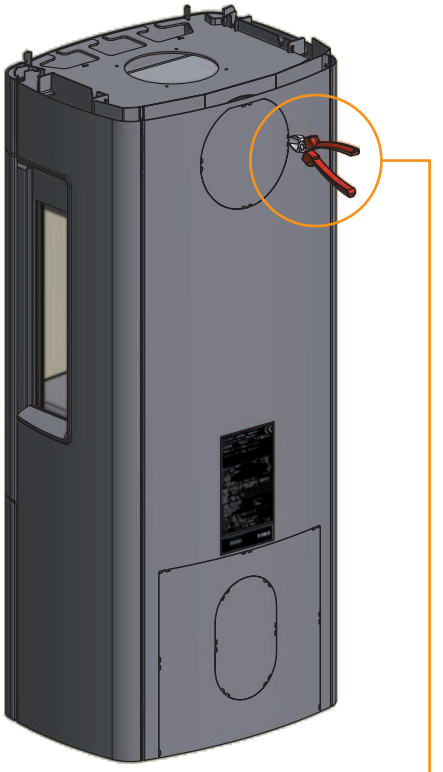

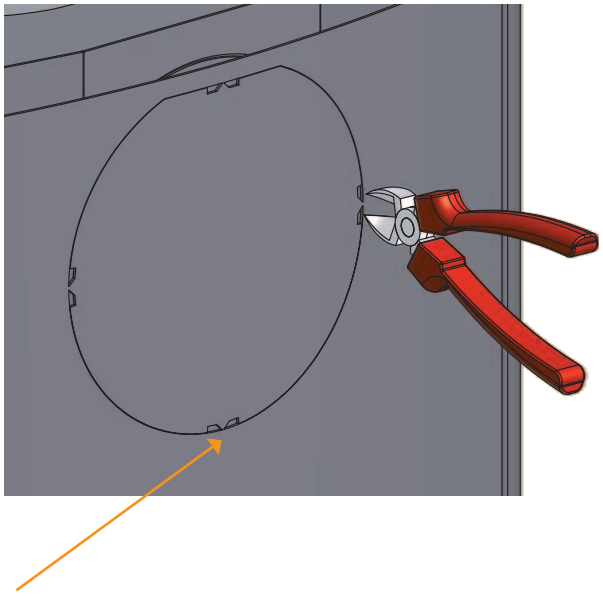

Lift the heat shield off the stove and cut the cover plate free using cutting pliers at the fastening points. Remove the heat shield.

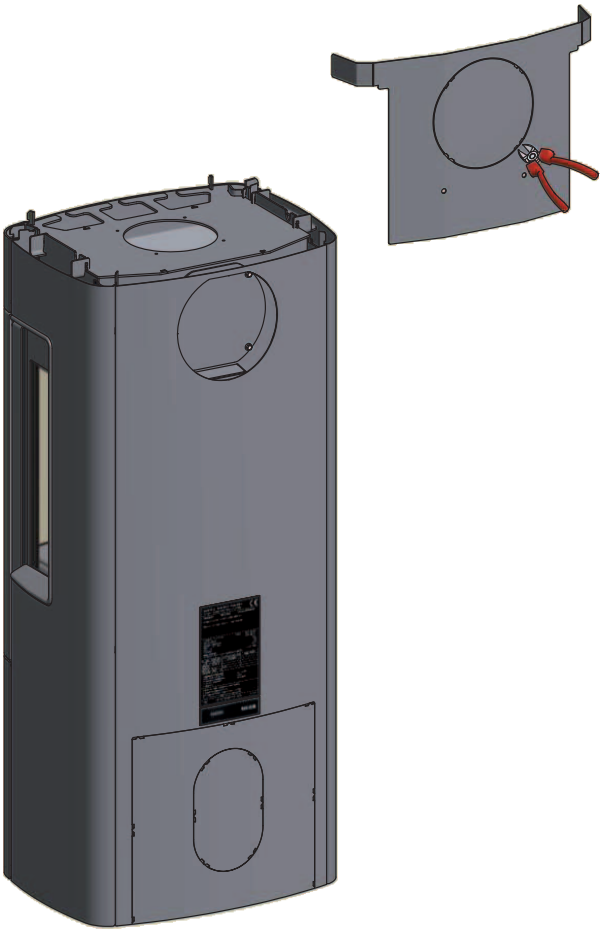

Remove the cover. This is to be used later as a seal and cover at the top of the smoke outlet.

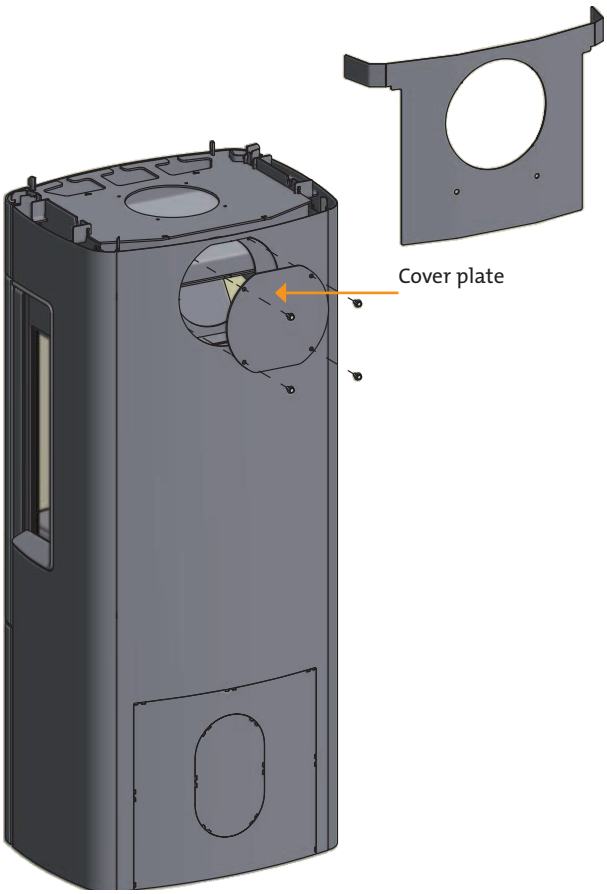

Fit the cover and tighten it. Replace the top plate.

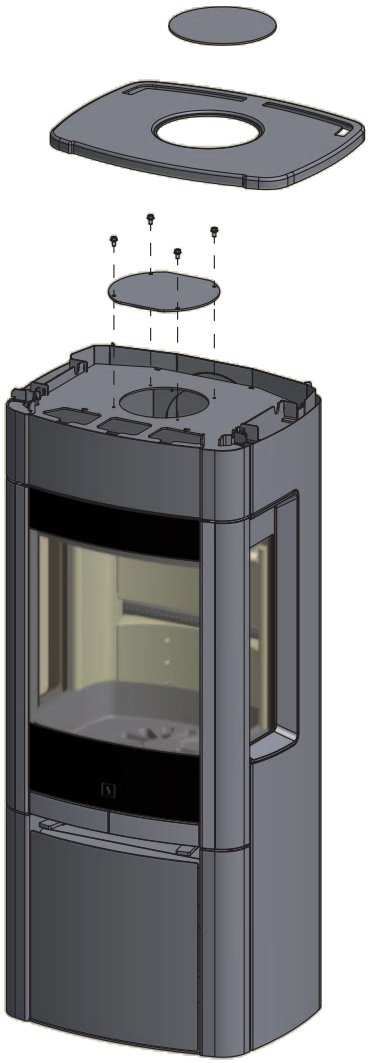

Fit the connecting piece with the four screws found in the stove's ash drawer. Hook the heat shield onto the stove.

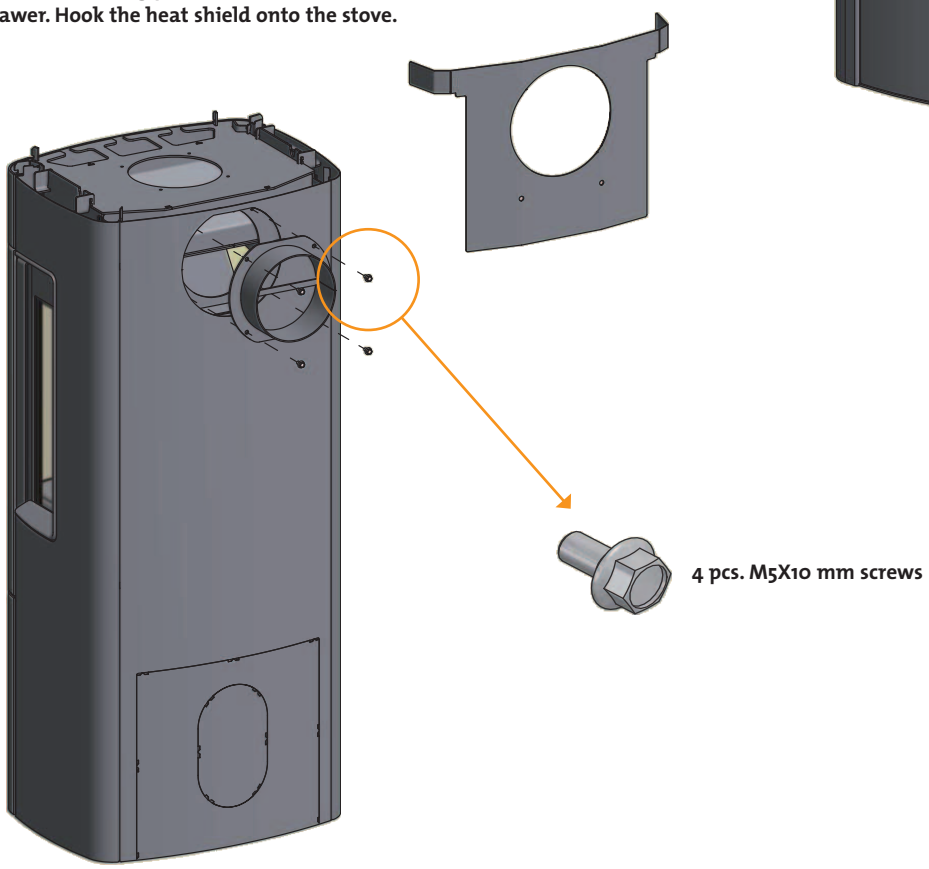

Fitting the natural stones

Some of the stoves are delivered with loose natural stone plates for mounting on the sides of the stove.

It is a natural material, wherefore there might be differences in structure and form.

Each natural stone must be mounted with distance bushings and screws which are already mounted in the stones.

The delivered gasket (4,5/7 m) should be cut in appropiate lengths and sticked onto the sides of the stove as shown below.

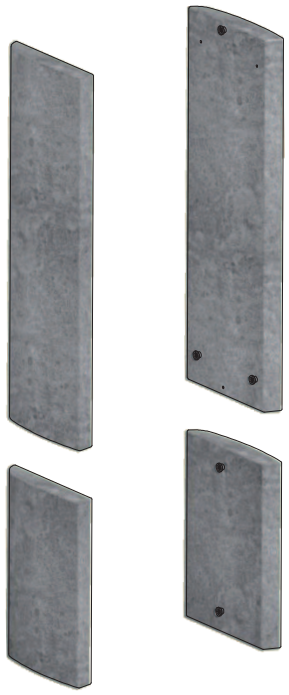

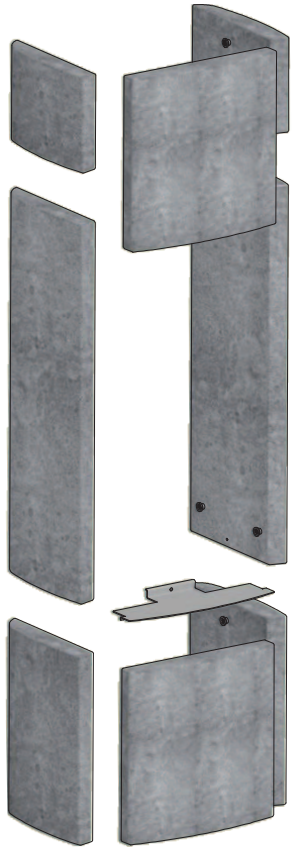

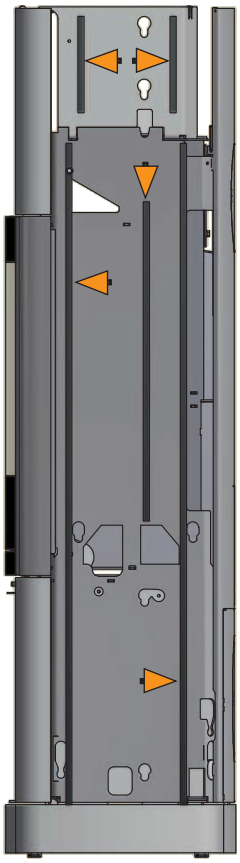

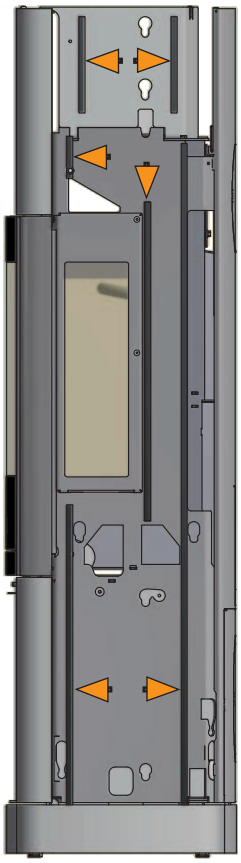

Hook the natural stone sides onto the stove.

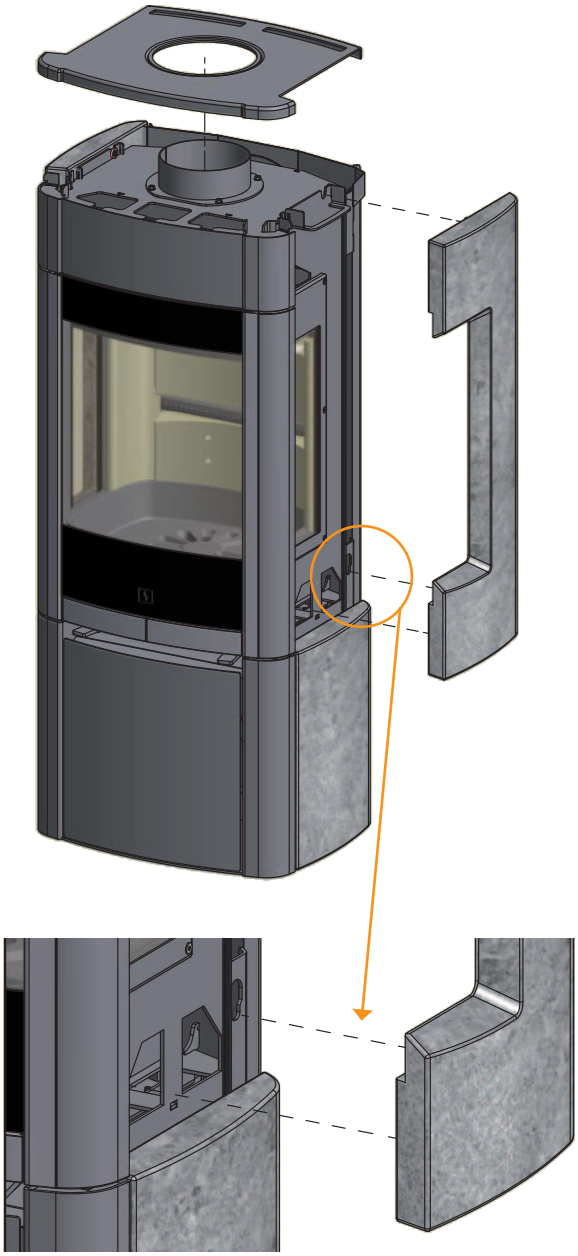

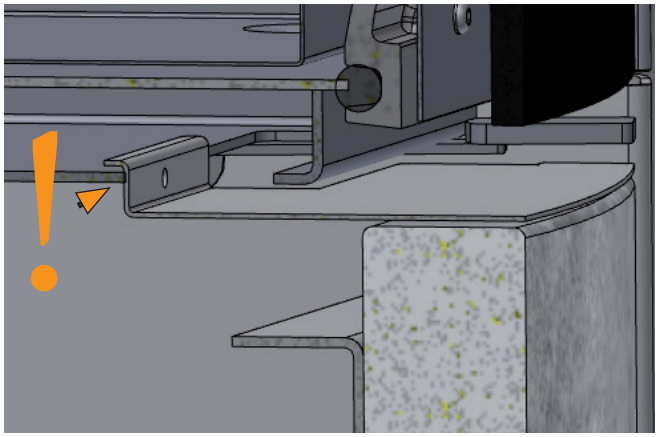

Fresh air intake

In a well-insulated house the air used for the combustion process has to be replaced. This particularly applies to houses with mechanical ventilation. There are different ways of making sure that air is exchanged. The most important thing is to ensure that there is a supply of air to the room where the wood stove is located. The external wall vent must be located as close to the wood stove as possible, and you must be able to close it when you are not using the stove.

National and local building regulations must be followed with regard to connection of a fresh air intake.

Closed combustion system

You should use the closed combustion system for the wood-burning stove if you live in a newly-built, airtight home. External combustion air is connected through a ventilation pipe via the wall or floor.

It must be possible to shut off the ventilation pipe with a valve, when the stove is not in use. Minimum Ø100 mm ventilation pipe, maximum length: 6 meters with a maximum of one bend.

If you want external combustion air via a wall, remove the cover plate at the rear of the stove with a pair of cutting pliers. See the procedure in this manual.

If the external combustion air is connected at the rear, the dismounted plate must be mounted on the hole for external air in the bottom of the stove.

NOTE: if the stove has a fresh air connection or closed combustion, the ventilation pipe must be open, when the stove is in use.

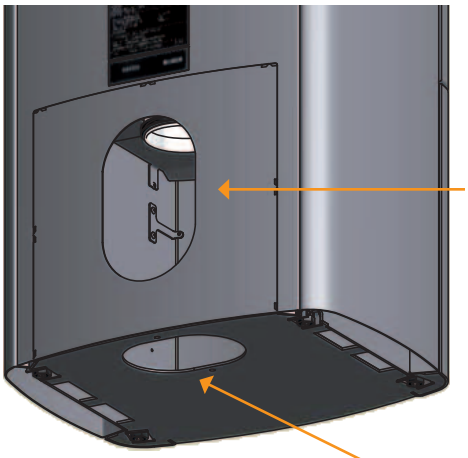

Remove the cover plate at the back of the stove or the cover plate at the bottom of the wood compartment store, as shown on page 16. Connect outside air to the connection piece underneath the combustion chamber.

Open plinth

If you want an open plinth, remove the wood compartment door and its stop as well as the large cover plate at the back of the stove.

Cover plate to be removed

Do not remove the radiation plate

Heat-storage stones

Heat-storage stones are made from a special material with a high heating capacity. The stones are heated up during the firing and gives off the heat again after the firing, which means that the stove stays warm for a longer time.

Firing with the vent open will give a quicker heating. Firing with the vent closed will extend the heating time of the stove.

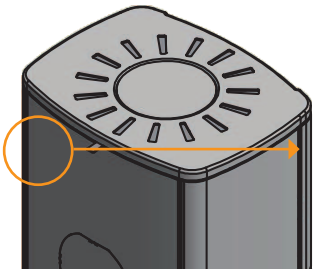

Open Closed

The vent for adjustment of the convection air is placed at the back of the high top

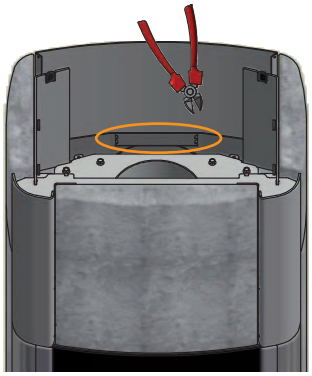

Cut off this plate from the heat shield in order to make place for the heat accumulating stones

Fitting the natural stone top

You can buy a natural stone top as an accessory. Place the stone top on the steel top plate

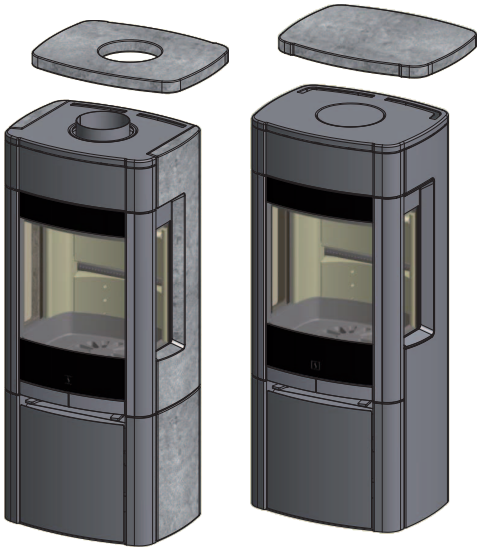

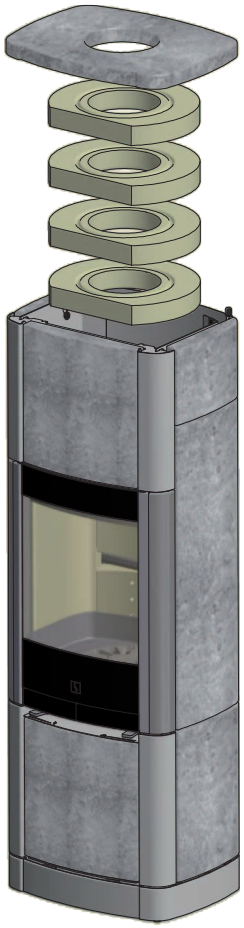

65-7 & 65-8

65-9 & 65-10

CB technology (Clean Burn)

The stove is equipped with CB technology. In order to ensure optimal combustion of gases released during the combustion process, air passes through a specially developed system of channels. The heated air is conducted into the combustion chamber through the holes in the rear lining of the combustion chamber and at the baffle plates. This airflow is driven by the combustion rate and cannot be regulated.

NOTE: Wood must never be added above the CB rail.

Primary air

The primary air regulation mechanism is used for lighting the fire, or to boost the burning process when you put wood on. The primary air vent is used when you use hard wood fuel such as oak and beech. The primary air vent can be closed if you use soft wood such as birch or pine for fuel.

Settings for normal load: 0-30%

Secondary air

Secondary air is pre-heated and fed indirectly to the fire. At the same time, the secondary airflow cleans the glass pane to prevent build-up of soot. If you over-restrict the secondary airflow, soot can build up on the glass pane. The secondary airflow determines the heat output from your stove.

Settings for normal load: 50-70%

Baffle plates

The baffle plates are located in the upper part of the combustion chamber. The plates hold back smoke, making sure it stays inside the combustion chamber for a longer time before escaping through the chimney. This reduces the flue gas temperature as the gases have more time to dissipate heat to the stove. The baffle plates must be removed for sweeping; see “Maintaining your wood-burning stove”. Note that the baffle plates are made of porous, ceramic material, and are liable to break easily. You should therefore handle them with care. The baffle plates are subject to wear and tear and not covered by the warranty.

Ash drawer

Open the door of the stove to access the ash drawer under the combustion chamber.

The ash drawer must always be closed during operation.

The ash drawer must not be become too full and must therefore be emptied at regular intervals.

Handle for riddling grate

The stove is equipped with a riddling grate that empties ash from the combustion chamber down into the ash container when activated.

The riddling grate must remain half open while the wood stove is lit.

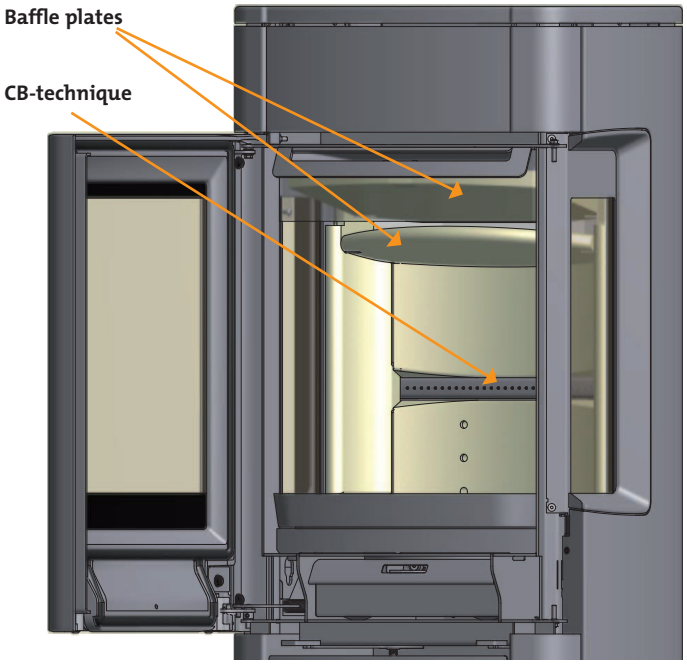

Adjustment of air supply, primary and secondary damper

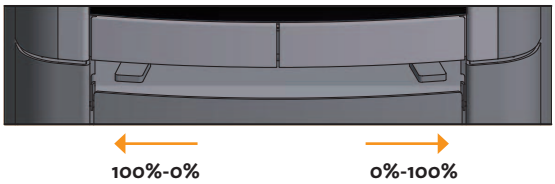

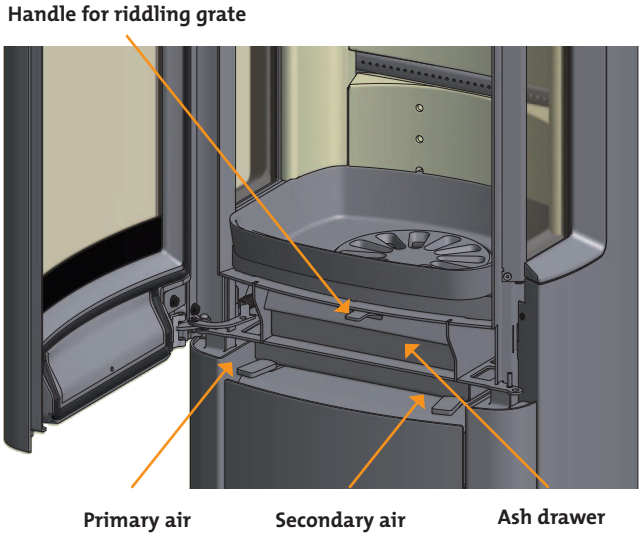

UK ONLY!

IMPORTANT!

This screw (M5X6) must be placed as shown in the picture,to prevent secondary air control closure beyond the 35mm open position .

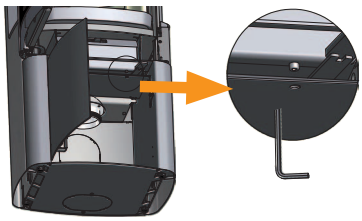

INSTRUCTIONS FOR HEATING

Environmentally-friendly firing

Avoid turning down your stove to the point where no flames are visible from the wood, as this leads to poor combustion and low efficiency. The gases released from the wood will not be burnt off due to the low temperature in the combustion chamber. Some of the gases will condense in the stove and flue system as soot, and this could lead to your chimney catching fire at a later point. The residual smoke which exits the chimney will pollute the surrounding area and cause an unpleasant smell.

Lighting

We recommend the use of fire lighters, or similar products, which are available from your Scan dealer. Using fire lighters helps light the wood more quickly and keeps the combustion process clean.

Never use liquid lighting fuels!

“Top down” lighting

- 4 pieces of wood approx. 20-25 cm long with a weight of approx. 0.4-0.5 kg per piece.
- 15-20 thin pieces of firewood of about 20 cm in length, with a total weight of approx. 0.8 kg.
- 4 fire lighters in bag or block form
- Place the pieces of wood, firewood and fire lighters in the combustion chamber.
- Set the primary and secondary airflow controls to maximum for the entire lighting phase.
- "Top down" lighting is a more environmentally-friendly way of lighting the fire and helps to keep the glass area as clean as possible.

Continuous firing

It is important to obtain as high a temperature as possible in the combustion chamber. This results in best possible use of the stove and fuel, as well as achieving clean combustion. In this way you will avoid build-up of soot on the combustion chamber lining and glass pane. During operation, you should not see any smoke; just a movement in the air that indicates combustion is in progress.

¬ After completing the lighting phase, you should have a good layer of embers in the stove; you can then start operation of it proper. Add two pieces of wood at a time: they should be about 0.6 to 0.8 kg in weight and about 25 cm long.

NOTE: The wood must catch fire quickly; this is why we recommend setting the primary airflow fully open. Operating the stove at too low a temperature and with too little primary air can lead to gases igniting, which can damage the stove.

¬ When adding wood, always open the glass door carefully to prevent smoke escaping.

¬ Never add wood while the fire is burning nicely.

Firing in the spring or autumn

In the spring/autumn transition period, where there is less need for heating, we recommend you light the stove “top down” once, perhaps adding just two pieces of wood as above to ensure that the combustion chamber lining burns clean again.

The function of the chimney

The chimney is the wood-burning stove’s motor; its performance determines how well your stove will work. The draught in the chimney creates negative pressure in the wood-burning stove. The negative pressure draws the smoke out of the stove and takes in air through the combustion air damper to fuel the combustion process. Combustion air is also used for the air wash system that keeps the window clear of soot.

The draught in the chimney is created by the difference in temperature inside and outside the chimney. The higher temperature difference, the better draught. This is why it is important that the chimney reaches operating temperature before you reduce the damper settings to restrict combustion in the stove (a brickwork chimney will take longer to reach operating temperature than a steel chimney). It is very important that the operating temperature is reached as quickly as possible on days when the draught in the chimney is poor due to unfavorable wind and weather conditions. You need to get a few flames going as quickly as possible. Chop the wood extra thin; use an extra fire lighter etc.

- After longer periods without use, you must check the chimney flue for blockages.
- You can connect several units to the same chimney. You should however first check the relevant regulations in this respect.

Using your stove in various weather conditions

The way the wind affects the chimney can have a big impact on how your stove reacts under various wind loads; you may need to adjust the airflow to achieve good combustion. Fitting a damper in the flue pipe may also help, as it will allow you to regulate the draught under changing wind loads. The damper must not close more than 80% of the surface.

Fog and mist can also have a big impact on chimney draught; you may need to use other settings for the combustion air to achieve good combustion.

General notes

note: Parts of the wood-burning stove, especially the outer surfaces, become hot during use. Due care should be exercised.

¬ Never empty ashes into a flammable container. Ashes can contain glowing embers long after you finish operating the stove. When the stove is not in use you can close the dampers to avoid a draught through the stove.

¬ If the stove has not been used for some time, you should check the flue passageways for potential blockages before relighting.

Chimney fire

In the event of a chimney fire, keep the stove door, the ash container, and all dampers on the stove closed. In an emergency, call the fire service.

We recommend that you get a chimney sweep to check the chimney before using the stove again.

1.

2.

3.

4.

Fire starters

Wood types	Kg Dry wood/m3	Compared to beech
Hornbeam	640	110%
Beech/Oak	580	100%
Ash	570	98%
Maple	540	93%
Birch	510	88%
Pine	480	83%
Fir	390	67%
Poplar	380	65%

Calorific value of the wood

Handling fuel

Selecting wood/fuel

You can use any type of wood as fuel. However harder woods, such as beech or ash, are generally better for heating, as they burn more evenly and create less ash. Other woods, such as maple, birch and spruce, are excellent alternatives.

Preparation

The best fuel is obtained where the tree has been felled and the wood sawn and split before May 1st. Remember to cut the wood to match the size of the combustion chamber. We recommend a diameter of 6-10 cm. The length should be about 6 cm shorter than that of the combustion chamber to leave enough space for air to circulate. If the diameter of the wood is greater than the above, it should be split down its length. Wood that has been split dries faster.

Storing

You need to store the sawn and split wood in a dry place for 1-2 years before it will be dry enough to burn. Wood dries faster if you stack it in an airy place. Before using it, it is a good idea to store the wood for a few days at room temperature. Remember that wood absorbs moisture from the air during autumn and winter.

Moisture

To avoid problematic impact on the environment and to ensure optimum operating economy, the wood should be perfectly dry before it can be used as fuel. Maximum wood moisture content should not exceed 20%. A moisture content of 15-18% will deliver best efficiency. An easy way of checking wood moisture content is to knock the ends of the two pieces of wood together. If the wood is moist, the sound will be slightly muffled.

If you use wood that is too damp, most of the heat it produces will be used up in evaporating the water. The stove will accordingly not increase in temperature, nor emit heat to the room as a result. This is obviously poor economy, and it will cause soot build-up on the glass pane, in the stove and in the chimney. Operation using moist wood also pollutes the environment.

Understanding the terms used to designate quantities of wood

Various terms are used to designate quantities of wood. Before you buy wood, it makes sense to familiarize yourself with these terms. There are various brochures, in public libraries for example, that cover this topic.

Use of the following as fuel is illegal

Painted, pressure impregnated, or glued wood, or sea driftwood. Nor should you ever burn chipboard, plastics, or treated paper. These contain substances which are hazardous to human health, to the environment, your stove, and your chimney. In short – make sure you only use proper wood.

Calorific value of the wood

The various woods have different calorific values. In other words, for certain species of wood, you will need to use a greater quantity to achieve the same heating performance. This Instruction Manual assumes that you will be using beech, which has a very high calorific value and is also the easiest wood to buy. If you use oak or beech as fuel, you need to bear in mind that these woods have a greater calorific value than, say, birch. To avoid any risk of damage to the stove, you should therefore make sure you use less fuel in these cases.

The Clean Air Act 1993 and Smoke Control Areas

Under the Clean Air Act local authorities may declare the whole or part of the district of the authority to be a smoke control area. It is an offence to emit smoke from a chimney of a building, from a furnace or from any fixed boiler if located in a designated smoke control area. It is also an offence to acquire an "unauthorised fuel" for use within a smoke control area unless it is used in an "exempt" appliance ("exempted" from the controls which generally apply in the smoke control area).

powers under the Act to authorise smokeless fuels or exempt appliances for use in smoke control areas in England. In Scotland and Wales this power rests with Ministers in the devolved administrations for those countries. Separate legislation, the Clean Air (Northern Ireland) Order 1981, applies in Northern Ireland. Therefore it is a requirement that fuels burnt or obtained for use in smoke control areas have been "authorised" in Regulations and that appliances used to burn solid fuel in those areas (other than "authorised" fuels) have been exempted by an Order made and signed by the Secretary of State or Minister in the devolved administrations.

Further information on the requirements of the Clean Air Act can be found here : http://smokecontrol.defra.gov.uk/

Your local authority is responsible for implementing the Clean Air Act 1993 including designation and supervision of smoke control areas and you can contact them for details of Clean Air Act requirements"

The secondary air valve has been modified, so that is does not close completely but has an opening corresponding to the position used at the lowest emission test.

You can use any type of untreated well seasoned wood as fuel.

The Scan 65 has been recommended as suitable for use in smoke control areas when burning wood and fitted with a mechanical stop to prevent secondary air control from closing completely. (see page 21).

Maintainance

Apart from having the chimney swept, your wood-burning stove does not require any regular maintenance. However, we do recommend servicing at least once every two years.

- Only use original spare parts for maintenance and repair of your stove.
- Make sure the stove is cold before starting maintenance or repair work.

Painted surfaces

Clean your wood-burning stove by wiping it down with a dry, lint-free cloth. If the paint finish gets damaged, you can purchase repair paint in spray form from your Scan dealer. As slight differences in color shade are possible, we recommend you spray a larger area to achieve a natural blend. For best results, apply repair spray when the stove is warm enough for you to just keep your hand on it, but no hotter.

Cleaning the glass

Our wood-burning stoves are designed to prevent serious soot build-up on the glass. The best way to achieve this is to make sure you have a good supply of combustion air. It is also very important that the wood is dry and the chimney correctly dimensioned.

Even if you operate the stove in accordance with our instructions, a slight film of soot may still accumulate on the glass. You can easily remove this film by wiping the glass down with a dry cloth and then with a cloth dampened with glass cleaner.

- The glass cleaner is not to get into contact with the gaskets, as this can discolor the glass permanently.

Combustion chamber lining

Slight cracks can appear in the combustion chamber lining due to moisture or sudden heating/cooling. These cracks have no influence on the output or lifetime of your stove. However, if the lining starts to crumble and fall out, you must replace it. The combustion chamber lining is not covered by the warranty.

Seals

All wood-burning stoves have seals made of ceramic material fitted to the stove, the door and/or the glass. These seals are subject to wear and tear and must be replaced when necessary.

Seals are not covered by the warranty.

Sweeping the chimney and cleaning stove

Follow national and local regulations for sweeping the chimney. We recommend having the stove cleaned regularly by a chimney sweep. Before cleaning the stove and sweeping the flue pipe and chimney, we recommend removing the baffle plates.

Checking the stove

Scan A/S recommends that you check your stove thoroughly after sweeping/cleaning. Check all visible surfaces for cracks. Check that all joints are tight and that the gaskets are correctly seated. Worn or deformed gaskets should be replaced.

Servicing

We recommend that the stove is thoroughly serviced at least once every two years by a qualified fitter. The service should include the following:

- Lubricate the hinges using copper grease.
- Check the gaskets. Replace any that are broken or have hardened.
- Check the combustion chamber bottom and riddling grate.
- Check the heat-insulating materials.

Service

Baffle plates and combustion chamber lining

Be very careful when removing the baffle plates from the stove.

Lift up the lower baffle plate, remove the pins and take out the baffle plate.

Lift the upper baffle plate to the back of the combustion chamber.

Remove pins. Pull the plate free from the baffle plate holder and remove it.

Lift the combustion chamber lining's sides, remove them from the rear cover and take them out.

Note that the combustion chamber lining's sides support the rear cover so this could fall when the sides are removed.

Remove the rear cover

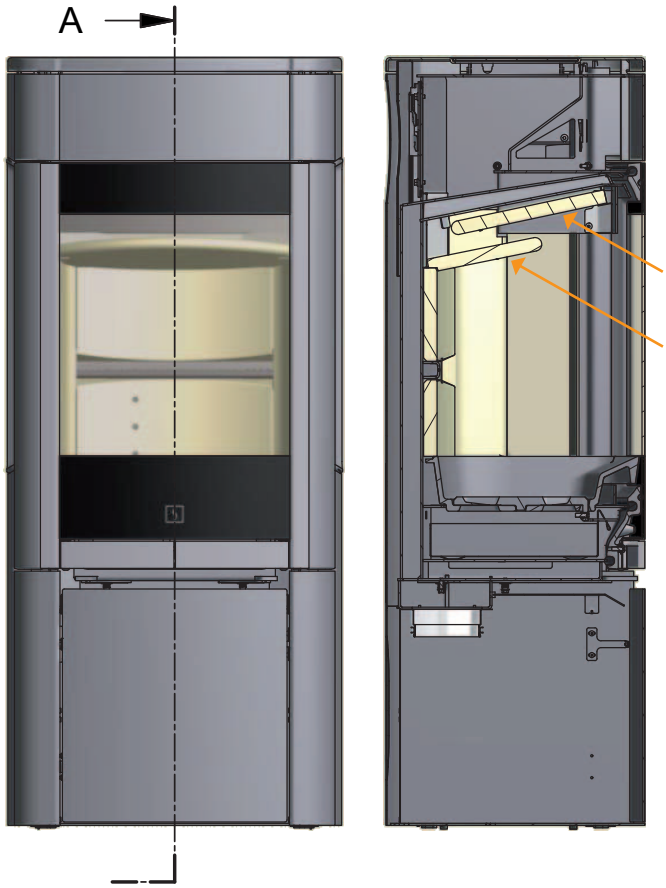

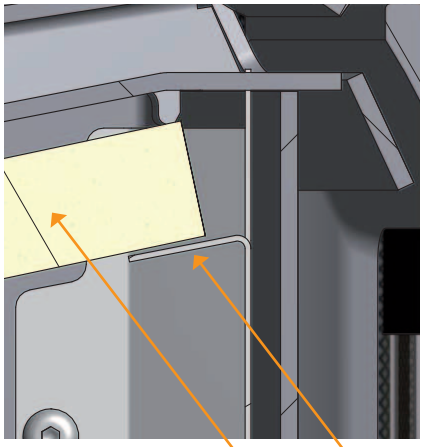

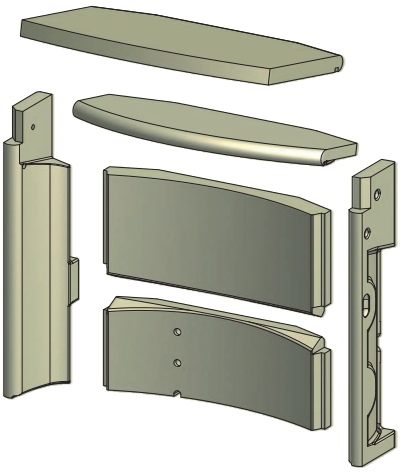

65-2, 65-4, 65-6, 65-8 & 65-10
(with side windows)

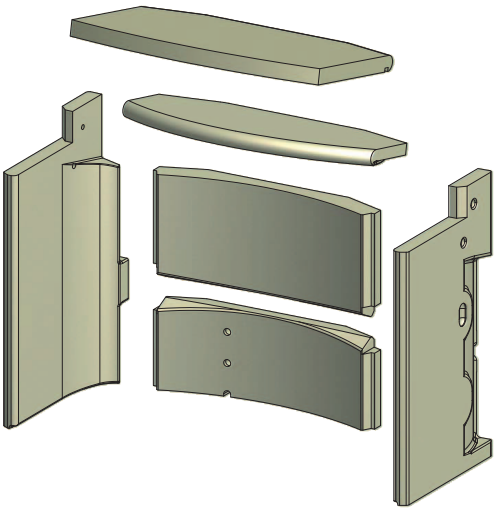

65-1, 65-3, 65-5, 65-7 & 65-9
(without side windows)

Smoke escaping

- Damp wood
- Chimney not drawing properly
- Chimney is not properly dimensioned for the stove
- Check if the smoke gas pipe/chimney are blocked
- Is the chimney the right height for its surroundings?
- At rear outlet, check that the flue pipe does not obstruct the chimney draught
- Vacuum in room
- The door is opened before the embers have burned down sufficiently

Wood burning too quickly

- The air valves are set incorrectly
- The baffle plates is incorrectly mounted or missing
- Inferior firewood (waste wood, pallets etc.)
- Chimney too large

Soot build-up on glass

- Incorrect secondary airflow setting
- Excessive primary air
- Damp wood
- Wood pieces too large on lighting
- Inferior firewood (waste wood, pallets etc.)
- Chimney not drawing sufficiently
- Vacuum in room

Excessive soot build-up in chimney

- Poor burning (more air required)
- Damp wood

The surface of the stove is turning grey

- **Overheating (see instructions for heating)**

Poor heating performance of stove

- Damp wood
- Not enough wood
- Inferior wood quality with low fuel value
- Baffle plates are not fitted correctly

Odour coming from stove

- The lacquer on the stove hardens when you use the stove for the first time; this can cause an odour. Open a window or a door for ventilation, and make sure the stove is heated up sufficiently to avoid odours later.
- When heating up and cooling down, the stove may make some clicking noises. These are due to the huge temperature differences to which the material is exposed and do not indicate any product defects.

Warranty

All wood-fired Scan products are made of high-quality materials and subject to strict quality controls before leaving the factory. We give a warranty of 5 years on manufacturing errors or defects.

You must quote your stove's product registration number when you contact us or your authorized Scan dealer with a warranty claim.

The warranty covers all parts which in the opinion of Scan A/S require repair or replacement due to manufacturing or construction error

The warranty applies to the original purchaser of the product only, and is not transferable (except on prior sale).

The warranty covers only damage caused by manufacturing or construction errors.

The following parts are not covered by the warranty

- Wear and tear parts, such as the combustion chamber liners, baffle plates, riddling grate, glass, and seals (except for defects which were present on delivery).
- Defects caused by external chemical and physical influences during transportation, storage and assembly, or at a later time.
- Soot build-up caused by poor chimney draught, damp wood, or improper use.
- Costs of additional heating in connection with a repair.
- Transport costs.
- Costs for setting up, removing the wood stove.

This warranty is void

- In case of incorrect installation (the installer is responsible for observing and complying with legal requirements and local bylaws, along with this Instructions manual for the wood-burning stove and accessories).
- In case of improper use, and/or use of prohibited fuels, non-original spares (see this instructions manual).
- If the product registration number of the stove has been removed or damaged.
- In case of repairs that do not comply with our instructions or instructions by an authorized Scan dealer.
- In case of any manipulation of the original state of this Scan product or its accessories.
- This warranty is only valid in the country to which this Scan product was originally supplied.

Always use original replacement parts, or parts recommended by the manufacturer.

Own comments